SLOVENSKI STANDARD
SIST EN 3016:2008

01-september-2008

Aeronavtika - Okrogle podložke, ugreznjene, porazdelitev obremenitve - Toplotnoodporno jeklo

Aerospace series - Washers countersunk, load spreading - Heat resisting steel

Luft- und Raumfahrt - Scheiben, angesenkt, druckverteilend - Hochwarmfester Stahl

Série aérospatiale - Rondelles fraisées de répartition - Acier résistant à chaud

Ta slovenski standard je istoveten z: EN 3016:2008

ICS:

49.030.50	Podložke in drugi blokirni elementi	Washers and other locking elements

SIST EN 3016:2008 **en**

EUROPEAN STANDARD

NORME EUROPÉENNE

EUROPÄISCHE NORM

EN 3016

May 2008

ICS 49.030.50

English Version

Aerospace series - Washers countersunk, load spreading - Heat resisting steel

Série aérospatiale - Rondelles fraisées de répartition - Acier résistant à chaud

Luft- und Raumfahrt - Scheiben, angesenkt, druckverteilend - Hochwarmfester Stahl

This European Standard was approved by CEN on 12 December 2007.

CEN members are bound to comply with the CEN/CENELEC Internal Regulations which stipulate the conditions for giving this European Standard the status of a national standard without any alteration. Up-to-date lists and bibliographical references concerning such national standards may be obtained on application to the CEN Management Centre or to any CEN member.

This European Standard exists in three official versions (English, French, German). A version in any other language made by translation under the responsibility of a CEN member into its own language and notified to the CEN Management Centre has the same status as the official versions.

CEN members are the national standards bodies of Austria, Belgium, Bulgaria, Cyprus, Czech Republic, Denmark, Estonia, Finland, France, Germany, Greece, Hungary, Iceland, Ireland, Italy, Latvia, Lithuania, Luxembourg, Malta, Netherlands, Norway, Poland, Portugal, Romania, Slovakia, Slovenia, Spain, Sweden, Switzerland and United Kingdom.

EUROPEAN COMMITTEE FOR STANDARDIZATION
COMITÉ EUROPÉEN DE NORMALISATION
EUROPÄISCHES KOMITEE FÜR NORMUNG

Management Centre: rue de Stassart, 36 B-1050 Brussels

Ref. No. EN 3016:2008: E

Contents

Page

Figures

Tables

Foreword

This document (EN 3016:2008) has been prepared by the Aerospace and Defence Industries Association of Europe - Standardization (ASD-STAN).

After enquiries and votes carried out in accordance with the rules of this Association, this Standard has received the approval of the National Associations and the Official Services of the member countries of ASD, prior to its presentation to CEN.

This European Standard shall be given the status of a national standard, either by publication of an identical text or by endorsement, at the latest by November 2008, and conflicting national standards shall be withdrawn at the latest by November 2008.

Attention is drawn to the possibility that some of the elements of this document may be the subject of patent rights. CEN [and/or CENELEC] shall not be held responsible for identifying any or all such patent rights.

According to the CEN/CENELEC Internal Regulations, the national standards organizations of the following countries are bound to implement this European Standard: Austria, Belgium, Bulgaria, Cyprus, Czech Republic, Denmark, Estonia, Finland, France, Germany, Greece, Hungary, Iceland, Ireland, Italy, Latvia, Lithuania, Luxembourg, Malta, Netherlands, Norway, Poland, Portugal, Romania, Slovakia, Slovenia, Spain, Sweden, Switzerland and the United Kingdom.

1 Scope

This standard specifies the characteristics of heat resisting steel, countersunk, load spreading washers for use in aerospace applications at temperatures not exceeding 650 °C.

They are intended primarily for use under the head of bolts with strength classification up to 1 250 MPa. They are used to provide sufficient bearing area to prevent indentation of parent metals with low compressive strength at operating temperatures, thus ensuring no relaxation in the bolt load occurs.

2 Normative references

The following referenced documents are indispensable for the application of this document. For dated references, only the edition cited applies. For undated references, the latest edition of the referenced document (including any amendments) applies.

EN 2171, *Aerospace series — Heat resisting steel FE-PA 92 HT,* R_m *> 900 MPa, bars*

EN 2175, *Aerospace series — Heat resisting alloy FE-PA2602 (X4NiCrTiMoV26-15), solution treated and precipitation treated — Sheet, strip and plate 0,5 mm ≤ a ≤ 10 mm,* R_m *≥ 850 MPa*[1)]

EN 2424, *Aerospace series — Marking of aerospace products*[1)]

EN 2516, *Aerospace series — Passivation of corrosion resisting steel and decontamination of nickel base alloys*

ISO 4759-3, *Tolerances for fasteners — Part 3: Plain washers for bolts, screws and nuts — Product grades A and C*

3 Required characteristics

3.1 Configuration, dimensions, tolerances, masses

The configuration shall be in accordance with Figure 1; the dimensions, tolerances and masses shall conform to the values shown in Figure 1 and in Table 1 after passivation except for surface roughness.

For washers produced from sheet or strip material according to EN 2175 the requirement of ISO 4759-3 may be applied for roll over and fracture tolerances.

3.2 Materials

Steel EN 2171 or EN 2175.

3.3 Surface roughness

See Figure 1. The values apply before passivation.

3.4 Surface treatment

Passivation EN 2516.

---

1) Published as AECMA prestandard at the date of publication of this standard.

Dimensions in millimetres

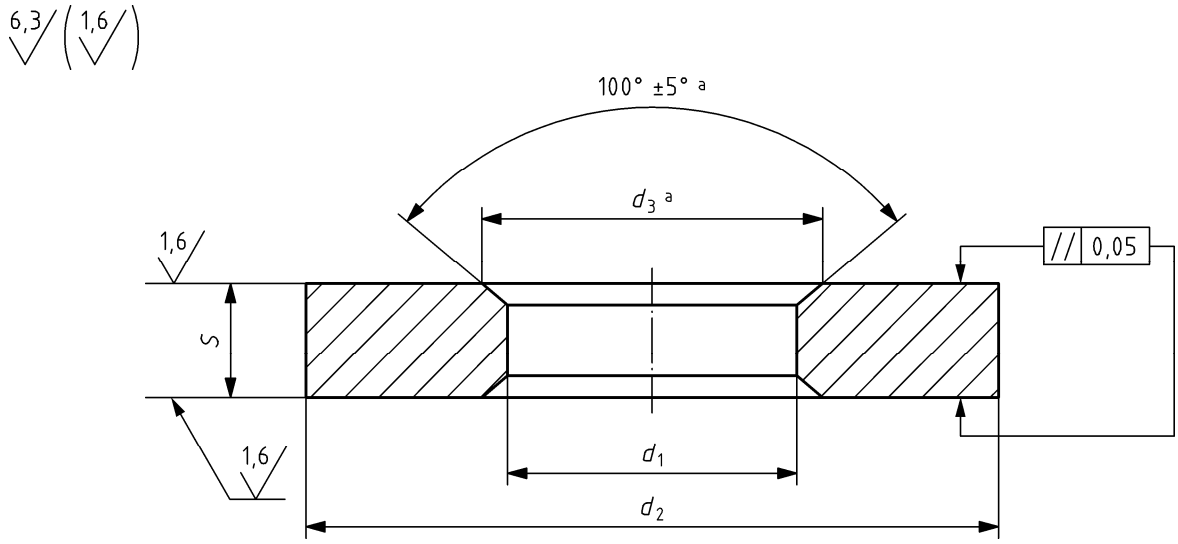

Break sharp edges 0,1 mm to 0,2 mm

a both sides

Figure 1 — Configuration

Table 1 — Dimensions and masses

Diameter code	Bolt thread size mm	d_1 mm H13	d_2 mm nom.	d_2 mm tol.	d_3 mm nom.	d_3 mm tol.	s a mm + 0,10	Mass b 1 000 pieces kg
030	3 × 0,50	∅ 3,10	∅ 7,40	± 0,20	∅ 3,85	± 0,1	1,00	0,27
040	4 × 0,70	∅ 4,10	∅ 9,40		∅ 4,85			0,43
050	5 × 0,80	∅ 5,10	∅ 12,20		∅ 6,00		2,00	1,49
060	6 × 1,00	∅ 6,10	∅ 14,80		∅ 7,40			2,18
070	7 × 1,00	∅ 7,10	∅ 16,90	± 0,30	∅ 8,40			2,83
080	8 × 1,00	∅ 8,10	∅ 19,40		∅ 9,40			3,76
100	10 × 1,25	∅ 10,10	∅ 23,50		∅ 11,60	± 0,15	2,50	6,81
120	12 × 1,25	∅ 12,10	∅ 28,10		∅ 13,80			9,72
140	14 × 1,50	∅ 14,10	∅ 31,30		∅ 16,15			11,71

a Flatness variations are included in thickness tolerances.

b Mass calculated on the basis of 7,85 kg/dm^3.

4 Designation

Each washer shall only be designated as in the following example:

Description block	Identity block
Washer, countersunk, load spreading	EN 3016 — 070

Number of EN standard

Diameter code (see Table 1)

If necessary the originator code I9005 shall be placed between the description block and the identify block.

5 Marking

EN 2424, Style G (Packaging).

In addition, the quantity shall be declared (number).