NOTICE: This standard has either been superseded and replaced by a new version or discontinued.
Contact ASTM International (www.astm.org) for the latest information.

Designation: E 767 – 96

Standard Test Method for Shear Strength Properties of Metal Connector Plates[1]

This standard is issued under the fixed designation E 767; the number immediately following the designation indicates the year of original adoption or, in the case of revision, the year of last revision. A number in parentheses indicates the year of last reapproval. A superscript epsilon (ε) indicates an editorial change since the last revision or reapproval.

INTRODUCTION

The use of prepunched metal connector plates with or without integral projecting teeth as well as solid metal connector plates, usually fabricated from structural quality sheet coils, such as described in Specification A 653/A 653M, to fasten wood members together is a widely accepted practice. In many applications, these plates must resist shear forces, in one or two planes.

These plates must resist the force to be transferred from the wood member into the plate at the interface of the connection and wood members. The plate's resistance to a shear force in this plane is a measure of the ability of the teeth or nails to transmit forces from the wood member to the plate. This shear force is developed as the force per unit area of the plate, or force per tooth or nail. The method for arriving at the unit plate value is described in Test Methods D 1761.

These plates must resist shear forces through their cross sections in a plane perpendicular to the face of the plate. This resistance to shear is a measure of the ability of the connection to transmit forces within the connection. This test method is to be used for the determination of unit design values for pairs of plates (one pair on each side of the connection of the three-member specimen) subject to a shear force through their cross section.

During manufacture and subsequent loading of these plates, stress concentrations develop around the teeth and nail holes. Because of these stress concentrations and the difficulty of predicting the path of failure, design values for plates shall be based on tests rather than analytical methods. The shear resistance of the perforated plate is compared to the theoretical shear resistance of a solid metal-coupon control specimen to arrive at the effective shear resistance ratio of the perforated plate in the orientation tested.

If a given section taken through the length of a plate differs in a geometric character from a section taken in an alternative orientation, the effective shear resistance ratio of the plate, that is, the ratio of perforated-plate shear stress and matched solid-section shear stress, shall be a function of the alternative orientation. If this is the case, the test method presented here requires that the net section of the plate be evaluated at six different orientations.

If the net cross section of the plate is identical for all orientations, testing only along its length shall be necessary. The resulting effective shear resistance ratio of the plate is then applicable to all orientations of the plate.

If the effective shear resistance ratio is desired for any specific angle of plate orientation, it shall be evaluated by this test method.

If the plate is without prepunched (or predrilled) holes immediately prior to assembly of the wood members and teeth or nails are not to be located along the shear plane, tests on specimens, following the manufacturer's recommended minimum edge spacing, shall be used to determine the effective shear resistance ratio by this test method.

Since shear tests are difficult to perform on the solid metal-coupon control specimens, tension tests on these control specimens shall be substituted. Such tests shall be conducted in accordance with Test Methods E 8.

Tensile values are related to shear values by the Von Mises yield theory which indicates that the theoretical yielding in shear occurs at a stress equal to 0.577 of the yield stress in tension. For purposes of this test evaluation, the ultimate shear stress and ultimate tensile stress are in the same ratio.

The test specimens can be used for the evaluation of metal connector plates with integral teeth projecting from one plate side or both plate sides. In the former case, the plates are located along the sides of the test specimen. In the latter case, the plates are located along the interfaces of the test specimen.

Copyright © ASTM, 100 Barr Harbor Drive, West Conshohocken, PA 19428-2959, United States.

An example of determining the shear resistance of metal connector plates is presented in Appendix X1.

Alternate static (monotonic) and dynamic (cyclic) compression and tension tests on two-member test specimens are described in Appendix X2. The selection of the type of test specimen and test setup depends on the specific requirements for test data.

1. Scope

1.1 This test method provides a basic procedure for evaluating the effective shear resistance of the net section of finished metal connector plates.

1.2 The determination of the tensile properties of metal connector plates is covered in Test Method E 489.

1.3 Test Methods D 1761 covers the performance of the teeth and nails in the wood members during the use of metal connector plates.

1.4 This test method serves as a basis for determining the comparative performance of different types and sizes of metal connector plates resisting shear forces.

1.5 This test method provides a procedure for quantifying shear strength properties of metal connector plates and is not intended to establish design values for connections fabricated with these plates.

1.6 This test method does not provide for the corrosion testing of metal connector plates exposed to long-term adverse environmental conditions where plate deterioration occurs as a result of exposure. Under such conditions, special provisions shall be introduced for the testing for corrosion resistance.

1.7 In the case of dispute, the inch-pound units, shown in parentheses, shall be governing.

1.8 *This standard does not purport to address all of the safety concerns, if any, associated with its use. It is the responsibility of the user of this standard to establish appropriate safety and health practices and determine the applicability of regulatory limitations prior to use.*

iTeh Standards
(https://standards.iteh.ai)
Document Preview
ASTM E767-96
https://standards.iteh.ai/catalog/standards/sist/ab60ac56-...-8007f2094872/astm-e767-96

2. Referenced Documents

2.1 *ASTM Standards:*

A 591/A 591M Specification for Steel Sheet, Electrolytic Zinc-Coated, for Light Coating Mass Applications[2]

A 653/A 653M Specification for Steel Sheet, Zinc-Coated (Galvanized) or Zinc-Iron Alloy-Coated (Galvannealed) by the Hot-Dip Process[2]

A 924/A 924M Specification for General Requirements for Steel Sheet, Metallic-Coated by the Hot-Dip Process[2]

D 1761 Test Methods for Mechanical Fasteners in Wood[3]

E 4 Practices for Force Verification of Testing Machines[4]

E 8 Test Methods for Tension Testing of Metallic Materials[4]

E 489 Test Method for Tensile Strength Properties of Metal Connector Plates[5]

E 575 Practice for Reporting Data from Structural Tests of Building Constructions, Elements, Connections, and Assemblies[5]

E 631 Terminology of Building Constructions[5]

F 680 Test Methods for Nails[6]

2.2 *ANSI Standard:*[7]

ANSI/TPI 1—1995 National Design Standard for Metal-Plate-Connected Wood Truss Construction

2.3 *CSA Standard:*[8]

S 347-M-1980 Methods of Test for Evaluation of Truss Plates Used in Lumber Joints

3. Terminology

3.1 *Definitions*—For general definitions of terms used in this test method, see Terminology E 631. For specific definitions of terms, see the terminology section of Test Method E 489.

3.2 *Symbols Specific to This Standard:*

3.2.1 A—base-metal cross-sectional area (width times base-metal thickness) of solid metal-coupon control specimen.

3.2.2 α—angle of placement for plates tested at a specific orientation (see 8.3 and Figs. 1-4).

3.2.3 F_s—theoretical ultimate shear stress of the solid metal-coupon control specimen (0.577 F_t).

3.2.4 F_t—ultimate tensile stress of solid metal-coupon control specimen.

3.2.5 F_v—basic allowable shear stress in metal.

3.2.6 f_{sa}—ultimate shear stress of plate at angle α to lengthwise axis of plate.

3.2.7 f_t—ultimate shear stress of plate at angle α to lengthwise axis of plate, based on thickness of plate with coating thickness deducted.

3.2.8 L—gross length of plate.

3.2.9 l—calculated shear length of plate oriented at angleα to lengthwise axis of plate.

3.2.10 P_α—ultimate shear force resisted by test specimen assembled with plates oriented at angle α to lengthwise axis of plate.

3.2.11 $R_{s\alpha}$—effective shear resistance ratio at angle α, $f_{s\alpha}/F_s$.

3.2.12 T—ultimate tensile force resisted by metal-coupon control specimen.

3.2.13 t—gross thickness of plate and solid metal-coupon control specimen.

3.2.14 t_l—base-metal thickness of plate and solid metal-coupon control specimen after deducting coating thickness.

3.2.15 V—allowable plate shear design value for single plate at angle α to lengthwise axis of plate, based on thickness

[1] This test method is under the jurisdiction of ASTM Committee E-6 on Performance of Buildings and is the direct responsibility of Subcommittee E06.13 on Structural Performance of Connections in Building Constructions.

Current edition approved March 10, 1996. Published May 1996.

[2] *Annual Book of ASTM Standards*, Vol 01.06.

[3] *Annual Book of ASTM Standards*, Vol 04.10.

[4] *Annual Book of ASTM Standards*, Vol 03.01.

[5] *Annual Book of ASTM Standards*, Vol 04.07.

[6] *Annual Book of ASTM Standards*, Vol 15.08.

[7] Available from the American National Standards Institute, 11 W. 42nd St., 13th Floor, New York, NY 10036.

[8] Available from the Canadian Standard Association, 178 Rexdale Blvd., Rexdale, ON M9W 1R3, Canada.

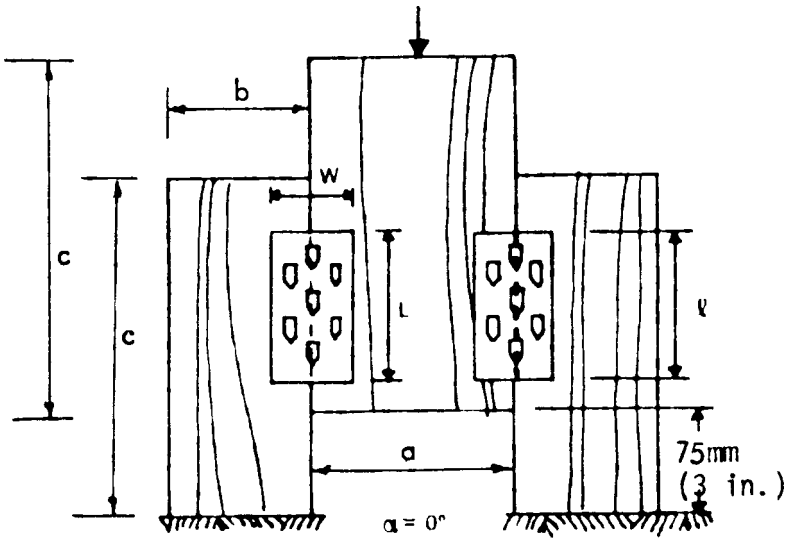

NOTE 1—In Figs. 1-4, outside members of the test specimen must be maintained in a parallel and vertical orientation by suitable means of restraint, using, for example, horizontal wood slats nailed to the front and back edges at top and bottom of the two legs of the two side members, without applying any friction to the three connection members.

FIG. 1 Zero Degree Orientation

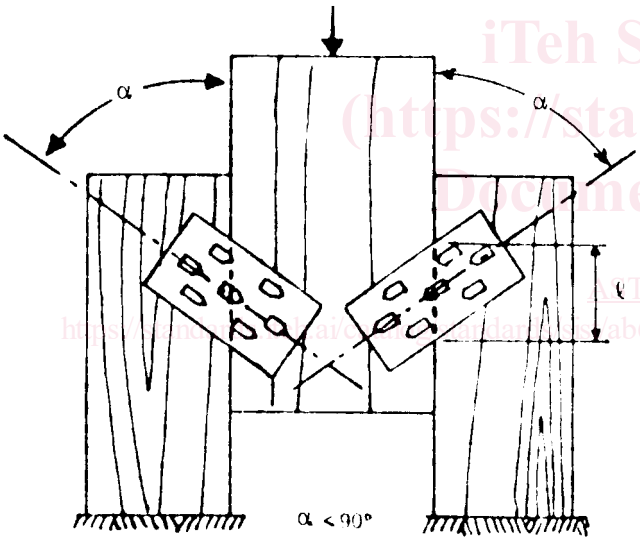

NOTE 1—See Note 1, Fig. 1.

FIG. 2 Acute Angle Orientation

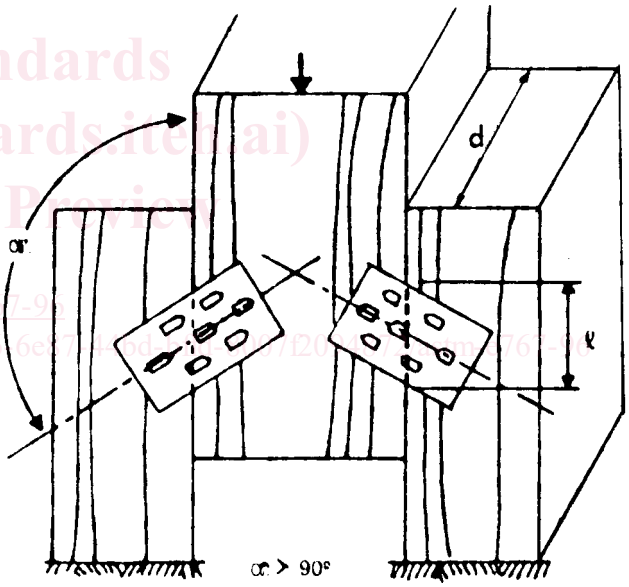

NOTE 1—See Note 1, Fig. 1.

FIG. 3 Obtuse Angle Orientation

iTeh Standards
(https://standards.iteh.ai)
Document Preview
ASTM E767-95

of plate with coating thickness deducted, in force per unit length.

3.2.16 *w*—gross width of plate.

4. Summary of Test Method

4.1 This test method provides procedures for (*1*) shear tests of finished metal connector plates, (*2*) tension tests of solid metal-coupon control specimens of the same material used in the manufacture of the plates, and (*3*) a comparison of the plates with the solid metal-coupon control specimens in terms of effectiveness.

4.2 When determining the allowable load for a single plate in shear, multiply the effective shear resistance ratio (for applicable orientation) by the basic allowable shear stress for the plate times the base-metal gross cross-sectional area of the plate (for applicable orientation), that is,

$$\text{Allowable load } (V) \text{ at angle } \alpha = R_{s\alpha} F_v t_l l$$

5. Significance and Use

5.1 The resistance of a metal connector plate to shear forces is one measure of its ability to fasten wood members together, where the forces must be transferred through the plate from one member to another member. Disregarding the effects of any plate projections, separately applied nails, and the wood members, the following factors affecting the shear performance

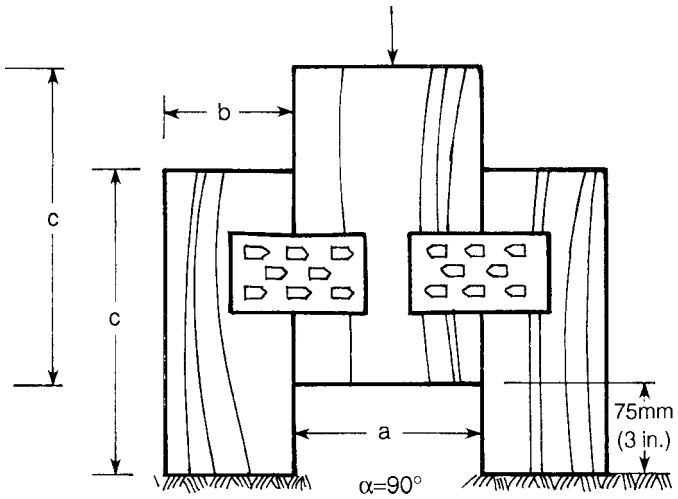

NOTE 1—The centroid of the plate contact area on the outer connection members shall be above the centroid of the plate contact area on the center connection member to ensure tension shear for orientations with angle α < 90 deg. To ensure compression shear for orientations with angle α > 90 deg, the centroid of the plate contact area on the outer connection members shall be below the centroid of the plate area on the center connection member.

FIG. 4 90° Orientation

of a plate shall be considered when using this test method: length, width, and thickness of the plate; location, spacing, orientation, size, and shape of holes in the plate; edge and end distances of holes in the plate; stress concentrations around projections and perforations of the plate; basic properties of the plate metal, and unsupported length of the plate. When using this test method on nail-on plates, their performance is also influenced by the type, size, quantity, and quality of the nails used for load transfer as well as the method of installing the plates and their fasteners.

6. Apparatus

6.1 *Testing Machine*—A testing machine capable of applying tensile and compressive loads at a specific rate, and having an accuracy of ±1 % of the applied load, and calibrated in accordance with Practices E 4.

6.2 *Grips*—For tension tests, self-centering gripping devices for each specimen end shall be used that allow accurate specimen positioning, uniform load application, and complete rotational freedom, and shall safely hold the specimen during the test and after failure has occurred.

6.3 *Surfaces*—The testing-machine loading surfaces shall be parallel to each other and normal to the direction of the cross-head movement. The surfaces and placement of the assembly shall allow uniform axial loading of the specimen. The use of a spherical loading seat of appropriate dimensions is required if uniform axial loading of the connection is not assured otherwise.

6.4 *Displacement Gages*—Dial gages, having a smallest division of not more than 0.02 mm (0.001 in.), or any other suitable measuring devices or calibrated sensors of at least comparable accuracy and sensitivity shall be used to measure displacement relative to the original location prior to load application. These devices shall have sufficient measurement capability to indicate the displacement throughout the test range.

7. Test Material

7.1 *Metal Connector Plates*—The metal connector plates shall be typical of production and manufactured in accordance with the design and of materials specified by the plate manufacturer. The coil metal used for production of metal connector plates shall meet minimum specified grade properties, including the elongation for a 50-mm (2.0-in.) gage length to be at least 16 % for specified Grade C steel with a minimum 275-MPa (40-ksi) yield point and a minimum 380-MPa (55-ksi) ultimate tensile stress according to Specification A 653/A 653M.

7.2 *Solid Metal-Coupon Control Specimens*—The solid metal-coupon control specimens shall originate from the same coil from which the metal connector plates were fabricated.

7.3 *Nails*—Any nails, used for fastening the plates to the wood members, shall be typical of those used in the field and fully comply with the applicable design provisions for transferring the structural forces from member to member. For the definition of nails, see Terminology E 631, and for testing of nails, see Test Methods F 680.

7.4 *Wood Members*—The wood members of the connection shall be of such density and moisture content to ensure that failure occurs in the plates and not in the wood, teeth, or nails. The edges of the wood members shall not be modified from the dressed surface condition.

8. Sampling

8.1 Sampling of metal coils and metal connector plates shall provide for selection, on an objective and unbiased basis, of representative test specimens, typical of plate production, and cover the different widths and configuration of plates to be tested.

8.2 Testing for each of the six required plate orientations requires at least three replicate test specimens. Each three-member test specimen shall be made using three pieces of wood and four identical plates. A total of at least 18 test specimens is needed to obtain data for the required plate orientations of 0°, 30°, 60°, 90°, 120°, and 150°, as defined in 8.3.

8.3 *Angle of Inclination*—Angle α is the angle of inclination between the wood connection in the test sample (placed vertical) and the lengthwise axis of the plate. A zero-degree angle is defined when the lengthwise axis of the plate is parallel to the wood connection (see Fig. 1). Values for α greater than zero are described when the top of the lengthwise axis of the plate is rotated away from the loading axis (see Figs. 2-4).

8.4 Test a minimum of three solid metal-coupon control specimens from each coil utilized to fabricate the metal connector plate. The control specimens shall be taken from the coil adjacent to the section from which metal connector plates were manufactured.

9. Test Specimens

9.1 *Test Assemblies*—The three-member static (monotonic) compression test specimen for determining the shear resistance of metal connector plates (see Figs. 1-4), the conventional test

iTeh Standards (https://standards.iteh.ai) Document Preview
ASTM E767-96
https://standards.iteh.ai/catalog/standards/sist/ab60ac87-44bd-bffd-8007f2094872/astm-e767-96

specimen in the United States (Test Method E 767 and ANSI/TPI 1) and Canada (CSA S 347), is used for the static (monotonic) testing of metal connector plates of any commonly used size and thickness. They are pressed into the sides of the wood members across their interfaces. In the case of metal connector plates with integral teeth projecting from both plate sides, the plates shall be located along the interfaces of the three-member test specimen.

9.2 *Metal Connector Plates*—Firmly embed the metal connector plates chosen for evaluation of the net section at six orientations on both connection sides, without removal of any teeth from the plates, in an assembly fabricated using equal size plates, one on each side of each connection interface, with the length of the plate inclined at angle α to the axis of the wood connection. The minimum cross section of the plate shall be located directly over the shear plane of the connection. To achieve coincidence of minimum cross section with the connection, when it is not located directly over the shear plane, the plate shall be shifted laterally provided this lateral shift does not move the line of shear farther than the next row of plate perforations from the plate line of symmetry.

9.2.1 Press the plate teeth into the wood until the tooth side of the plate is flush with the surface of the wood. Do not overpress the plates. The embedment procedure shall be consistent with the method of installing the plates in the fabrication process of the plate-assembled components, that is, by pressing or rolling. In the case of nail-on plates, the method of attachment shall be in accordance with the field conditions.

9.2.2 Place the wood members in such a manner that the lumber grain is in the same direction. The ends of the center member of the three-member test specimen shall be a minimum of 75 mm (3 in.) above the corresponding ends of the outer members (see Fig. 1).

9.2.3 To reduce friction between the adjacent wood members of the test specimen, insert two thin (for example, 0.14-mm) polyethylene or similar films between the adjacent members during assembly of the connection. The connections in the assembly shall have an initially close but not compressed fit to minimize initial friction and keystone action.

9.2.4 The plates shall be of sufficient size to induce failure in the plate metal, rather than withdrawal failure of the teeth in the plate-wood interface. Alternatively, clamp the plates a minimum of 50 mm (2 in.) from the member ends, or otherwise firmly fasten, to prevent tooth withdrawal, provided such clamping or fastening does not affect the shear resistance of the plate. The connection-member dimensions shall be sufficient in size for the plates not to extend beyond the sides of the wood members and of such size not to result in failure of the wood members.

9.2.5 The centroid of the plate contact area on the outer connection members shall be above the centroid of the plate contact area on the center connection member to ensure tension shear for orientations with angle α <90°. To ensure compression shear for orientations with angle α >90°, the centroid of the plate contact area on the outer connection members shall be below the centroid of the plate area on the center connection member.

9.3 *Control Specimen*—Machine the solid metal-coupon control specimens into standard test specimens (see Fig. 5) to fulfill the requirements of Test Methods E 8.

9.4 *Coating Thicknesses*—Unless otherwise specifically required in the applicable documents, deduct the following coating thicknesses from the measured gross thickness of the metal connector plates and control specimens with the following coatings:

For A 525 G 90 coating: 0.038 mm (0.0015 in.)
For A 525 G 60 coating: 0.025 mm (0.0010 in.)
For A 591 electrolytic coating Class C: 0.007 mm (0.0003 in.)

10. Procedure

10.1 *General*—Before assembling the test specimens, measure all plates to determine their gross width (*w*) and length (*L*) at least to nearest 0.75 mm (0.03 in.) and their gross thickness (*t*) to the nearest 0.002 mm (0.0001 in.). Take measurements at least at three different locations on each plate, using the average of the three readings for the record. For plates to be tested at any orientation, accurately measure the Angleα for use in calculating the length of the plate (*l*) along the shear line. When angle of placement equals 0° and 90°, *l* equals *L* and *w*, respectively (see Figs. 1-4). Deduct the thickness of coating, if any, as indicated in 9.4 and as described in Specifications A 591/A 591M and A924/A 924M for type of coating used so that all calculations are made using the base-metal thickness (t_l).

10.2 *Testing*:

10.2.1 *Test Assemblies*—Place the plate test assembly between the platens of the testing machine. Use a spherical loading seat of a load-carrying capacity which is larger than that of the tested connection on top of the center member of the three-member test specimen to ensure uniform axial loading of the connection. Apply the load throughout the test at a uniform rate of the movable cross-head of the testing machine in such a way that the ultimate load is reached in not less than 1.0 min.

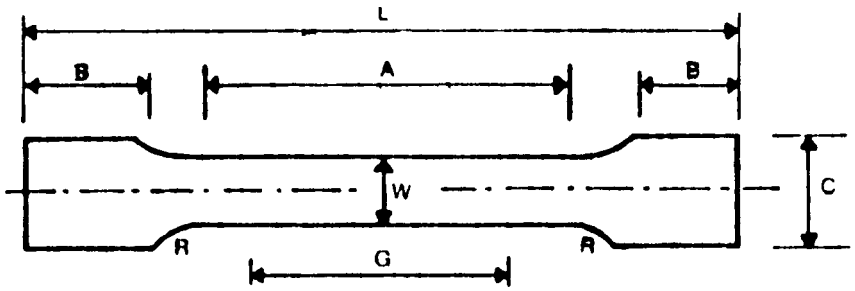

FIG. 5 Solid Metal-Coupon Control Specimen (for dimensions, see Test Methods E 8)

10.2.2 *Control Plates*—Conduct tests on the solid metal-coupon control specimens in accordance with Test Methods E 8. Ensure uniform stress distribution and prevent premature failure of the specimen in the grips of the testing machine. Where required to preclude failure of the grips or slippage, use special grips. Apply the load throughout the test at a uniform rate of motion of the movable platen of the testing machine in such a way that the ultimate test load is reached in not less than 1.0 min.

10.3 *Data Required*—For the metal connector plates and the solid metal-coupon control specimens, record the yield and ultimate loads, in newtons (N) or pounds-force (lbf). Take readings with a precision corresponding with the smallest graduation of the smallest practical load-range scale of the testing machine used.

11. Calculation (see Appendix X1 for example)

11.1 Calculate the yield and ultimate tensile stresses (F_t) of the solid metal-coupon control specimens by dividing the yield and ultimate loads in tension (T) by the base-metal cross-sectional area (A) with $F_t = T/A$. Use the mean of a minimum of three tests per plate thickness in further calculations.

11.2 Determine the theoretical yield and ultimate shear stresses of the solid metal-coupon control-specimen section (F_s) by multiplying the mean yield and ultimate tensile stresses (F_t) by 0.577, that is $F_s = 0.577\ F_t$.

11.3 Calculate the plate yield and ultimate shear stresses for each angle of plate orientation ($f_{s\alpha}$) by dividing one fourth of the yield and ultimate loads (P_α) by the mean base-metal gross cross-sectional area of the four plates. The base-metal gross cross-sectional area is obtained by multiplying l by t_l. Use the mean yield and ultimate shear-stress values of a minimum of three tests in further calculations.

11.4 Calculate the mean effective shear resistance ratios for angleα ($R_s\alpha$) by dividing the mean plate yield and ultimate shear stresses for angle α ($f_{s\alpha}$) by the theoretical yield and ultimate shear stresses of the solid metal-coupon control specimen section (F_s), with $R_{s\alpha} = f_{s\alpha}/F_s = f_{s\alpha}/0.577\ F_t$.

11.5 Determine the mean effective shear resistance ratios ($R_{s\alpha}$) for each orientation of the plate.

11.6 Determine maximum allowable load values in shear (force per unit length) for individual plates of the particular plate orientation under consideration by multiplying the basic allowable shear stress for the grade of metal used (F_v) by the appropriate effective shear resistance ratio ($R_{s\alpha}$) for a particular plate orientation and the base-metal thickness $t_l$of the plate, with $V = R_{s\alpha}F_v t_l$.

12. Report

12.1 The report shall follow the general outline of Practice E 575 and shall specifically include the following information:

12.1.1 Date of test and date of report,

12.1.2 Test sponsor and test agency,

12.1.3 Identification of metal connector plate: manufacturer, model, type, material, finish, shape, dimensions, number and shape of teeth, and other pertinent information, such as cracks and other characteristics including minimum specified yield and ultimate stresses of the metal. If separately applied fasteners are used with metal connector plates, provide identification of fasteners, such as type, size, quantity, and quality (see Test Methods F 680) of the nails used for load transfer as well as the method of installing the plates and their fasteners, including nail-hole description.

12.1.4 Detailed drawings or photographs of test specimens before and after testing, if not fully described otherwise,

12.1.5 Complete description of test method and loading procedures used, if there are any deviations from the methods prescribed in this test method, and indicate reasons for such deviations,

12.1.6 Number of specimens tested,

12.1.7 Rate of load application,

12.1.8 Elapsed time of testing,

12.1.9 All test data, including means, range of test values, and standard deviations,

12.1.10 Effective shear resistance ratio for each individual test specimen, and means for all identical test specimens,

12.1.11 Description of type and path of failure,

12.1.12 Summary of findings,

12.1.13 Certification of calibration of testing machine used,

12.1.14 Mill certification data for heat number of the metal coil(s) from which the plates were fabricated, and

12.1.15 List of observers and, if required, signatures of responsible persons and the professional seal of the responsible individual.

13. Precision and Bias

13.1 *Precision*—It is not possible to specify the precision of the procedure in this test method because the precision of this procedure within or between laboratories has not been established.

13.2 *Bias*—No justifiable statement is made on the bias of the procedure in this test method because the bias of this procedure within or between laboratories has not been established.

14. Keywords

14.1 metal connector plates; metal truss plates; sampling; shear strength properties; solid metal-coupon control specimens; steel truss plates; test material; test methods

iTeh Standards (https://standards.iteh.ai) Document Preview
ASTM E767-96
https://standards.iteh.ai/catalog/standards/sist/1ac0ac1a-44bd-bffd-8007f2094872/astm-e767-96