SLOVENSKI STANDARD
SIST EN 3201:2008

01-julij-2008

Aeronavtika - Luknje za vijake z metrskim navojem - Standard za projektiranje

Aerospace series - Holes for metric threaded fasteners - Design standard

Luft- und Raumfahrt - Durchgangslöcher für metrische Schrauben - Konstruktionsnorm

Série aérospatiale - Trous pour éléments de fixation filetés mériques - Norme de conception

Ta slovenski standard je istoveten z: EN 3201:2008

ICS:

49.030.01 Vezni elementi na splošno Fasteners in general

SIST EN 3201:2008 en

EUROPEAN STANDARD

NORME EUROPÉENNE

EUROPÄISCHE NORM

EN 3201

April 2008

ICS 49.030.01

English Version

Aerospace series - Holes for metric threaded fasteners - Design standard

Série aérospatiale - Trous pour éléments de fixation filetés mériques - Norme de conception

Luft- und Raumfahrt - Durchgangslöcher für metrische Schrauben - Konstruktionsnorm

This European Standard was approved by CEN on 3 November 2007.

CEN members are bound to comply with the CEN/CENELEC Internal Regulations which stipulate the conditions for giving this European Standard the status of a national standard without any alteration. Up-to-date lists and bibliographical references concerning such national standards may be obtained on application to the CEN Management Centre or to any CEN member.

This European Standard exists in three official versions (English, French, German). A version in any other language made by translation under the responsibility of a CEN member into its own language and notified to the CEN Management Centre has the same status as the official versions.

CEN members are the national standards bodies of Austria, Belgium, Bulgaria, Cyprus, Czech Republic, Denmark, Estonia, Finland, France, Germany, Greece, Hungary, Iceland, Ireland, Italy, Latvia, Lithuania, Luxembourg, Malta, Netherlands, Norway, Poland, Portugal, Romania, Slovakia, Slovenia, Spain, Sweden, Switzerland and United Kingdom.

EUROPEAN COMMITTEE FOR STANDARDIZATION
COMITÉ EUROPÉEN DE NORMALISATION
EUROPÄISCHES KOMITEE FÜR NORMUNG

Management Centre: rue de Stassart, 36 B-1050 Brussels

Ref. No. EN 3201:2008: E

Contents

Page

Foreword

This document (EN 3201:2008) has been prepared by the Aerospace and Defence Industries Association of Europe - Standardization (ASD-STAN).

After enquiries and votes carried out in accordance with the rules of this Association, this Standard has received the approval of the National Associations and the Official Services of the member countries of ASD, prior to its presentation to CEN.

This European Standard shall be given the status of a national standard, either by publication of an identical text or by endorsement, at the latest by October 2008, and conflicting national standards shall be withdrawn at the latest by October 2008.

Attention is drawn to the possibility that some of the elements of this document may be the subject of patent rights. CEN [and/or CENELEC] shall not be held responsible for identifying any or all such patent rights.

According to the CEN/CENELEC Internal Regulations, the national standards organizations of the following countries are bound to implement this European Standard: Austria, Belgium, Bulgaria, Cyprus, Czech Republic, Denmark, Estonia, Finland, France, Germany, Greece, Hungary, Iceland, Ireland, Italy, Latvia, Lithuania, Luxembourg, Malta, Netherlands, Norway, Poland, Portugal, Romania, Slovakia, Slovenia, Spain, Sweden, Switzerland and the United Kingdom.

1 Scope

This standard provides particulars of hole sizes, chamfer dimensions and positional tolerances to suit metric threaded fasteners with nominal diameters of 3 mm to 20 mm.

2 Hole characteristics

2.1 Clearance application

2.1.1 Clearance holes as defined in Table 1 shall be used for all general joint applications using non-fitting fasteners Figure 1.

2.1.2 The PD shank bolts quoted in Table 1 shall comply with the EN series.

2.2 Close clearance applications

On all rotating components and engine flanges, where it is unnecessary to have a fitted application. The close clearance holes defined in Table 4 with close tolerance shank bolts Figure 2 shall be used. This is required to obtain the good balancing characteristics needed for rotating assemblies and to ensure that joints cannot twist during assembly and cause misalignment of casings or rotors.

2.3 Fitted application

It is recognized that for mainshaft flanges, bolted discs and similar rotating applications, to ensure correct alignment of components and to enable accurate balancing it will be necessary to use the close tolerance holes defined in Table 6 with fitted fasteners Figure 4.

2.4 Hole chamfers

2.4.1 The side of the hole on which the bolt head sits shall be provided with a chamfer to ensure sufficient clearance exists to avoid crushing the bolt under head fillet radius.

2.4.2 Where there is a possibility of a bolt being fitted from either direction then the exposed end of the hole in both assembled flanges shall be chamfered.

2.5 Positional tolerances

2.5.1 Positional tolerances are applicable where two or more parts with the same nominal hole diameters are to be joined together to ensure that the fasteners can be satisfactorily assembled.

The details for the positional tolerances for clearance applications are given in Clause 4, for close clearance applications in Clause 6, and for fitted applications in Clause 8.

2.5.2 Clause 9 and Figures 6 to 10 detail examples of typical applications to which the positional tolerances given in Clause 4, Clause 6 and Clause 8 are to be applied.

3 Holes for clearance applications

See Table 1 and Figure 1.

Table 1

Nominal thread ∅ *D*	Hole ∅ *A*			Bolt PD shank ∅ *B*		PD shank diameter clearance		Chamfer ∅ *F*	
				max.	min.	max.	min.	max.	min.
3	3,30	H13	3,48 3,30	2,81	2,55	0,93	0,49	4,30	3,90
4	4,40	H13	4,58 4,40	3,67	3,41	1,17	0,73	5,40	5,00
5	5,50	H13	5,68 5,50	4,61	4,35	1,33	0,89	6,60	6,20
6	6,60	H13	6,82 6,60	5,48	5,22	1,60	1,12	8,00	7,60
7	7,70	H13	7,92 7,70	6,48	6,22	1,70	1,22	9,00	8,60
8	8,80	H13	9,02 8,80	7,48	7,22	1,80	1,32	10,00	9,60
10	10,80	H13	11,07 10,80	9,32	9,06	2,01	1,48	12,20	11,80
12	12,80	H13	13,07 12,80	11,32	11,06			14,40	14,00
14	14,80	H13	15,07 14,80	13,16	12,90	2,17	1,64	16,80	16,40
16	16,80	H13	17,07 16,80	15,16	14,90			18,80	18,40
18	18,80	H13	19,13 18,80	17,16	16,90	2,23		21,20	20,80
20	20,80	H13	21,13 20,80	19,16	18,90			23,20	22,80

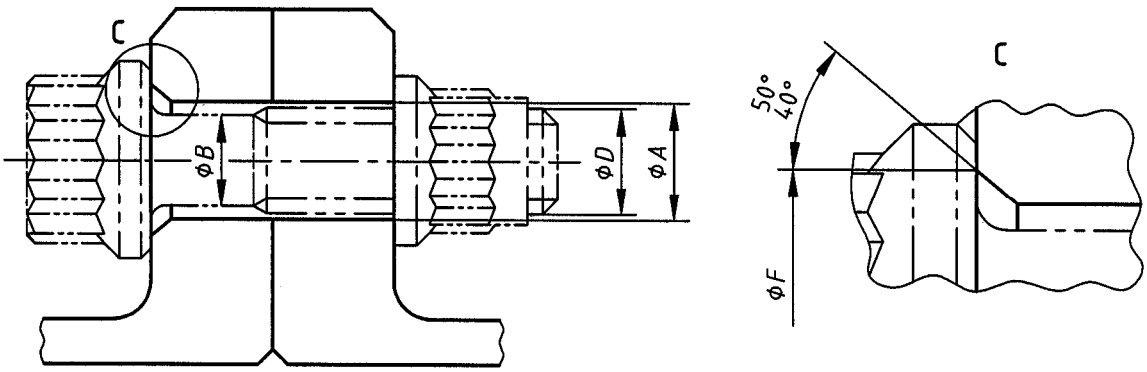

Figure 1

4 Positional tolerance's for clearance applications

4.1 Table 2 gives the positional tolerances that shall be used with the hole sizes from Table 1 used in type 1 applications see Figures 6 and 7, i.e. when the components being joined all have clearance holes.

4.2 Table 3 gives the positional tolerances that shall be used with the hole sizes tram Table 1 used in type 2 applications see Figures 8 to 10, i.e. when one of the components being fastened contains a tapped hole and insert or a captive nut etc., and shall apply at maximum material condition (MMC).

Table 2 — Type 1 applications

Nominal bolt diameter	3	4	5	6	7	8 thru 20
Positional tolerances MMC	∅ 0,3	∅ 0,4	∅ 0,5	∅ 0,6	∅ 0,7	∅ 0,8

Table 3 — Type 2 applications

Nominal bolt diameter	3	4	5	6	7	8 thru 20
Positional tolerances MMC	∅ 0,15	∅ 0,2	∅ 0,25	∅ 0,3	∅ 0,35	∅ 0,4

5 Holes for close clearance applications

See Table 4 and Figure 2.

Table 4

Nominal thread ∅ *D*	Hole ∅ *C*			Bolt fitted shank ∅ *E*			Shank diameter clearance		Chamfer ∅ *F*	
							max.	min.	max.	min.
5	5,15	H12	5,27 5,15	5,00	f7	4,990 4,978	0,292	0,160	6,20	5,90
6	6,15	H12	6,30 6,15	6,00	f7	5,990 5,978	0,322		7,76	7,40
7	7,15	H12	7,30 7,15	7,00	f7	6,987 6,972	0,328	0,163	8,76	8,40
8	8,15	H12	8,30 8,15	8,00	f7	7,987 7,972			9,76	9,40
10	10,15	H12	10,33 10,15	10,00	f7	9,987 9,972	0,358		12,03	11,60
12	12,15	H12	12,33 12,15	12,00	f7	11,984 11,966	0,364	0,166	14,23	13,80
14	14,15	H12	14,33 14,15	14,00	f7	13,984 13,966			16,58	16,15
16	16,15	H12	16,33 16,15	16,00	f7	15,984 15,966			18,67	18,15
18	18,15	H12	18,36 18,15	18,00	f7	17,984 17,966	0,394		21,02	20,50
20	20,15	H12	20,36 20,15	20,00	f7	19,980 19,959	0,401	0,170	23,02	22,50

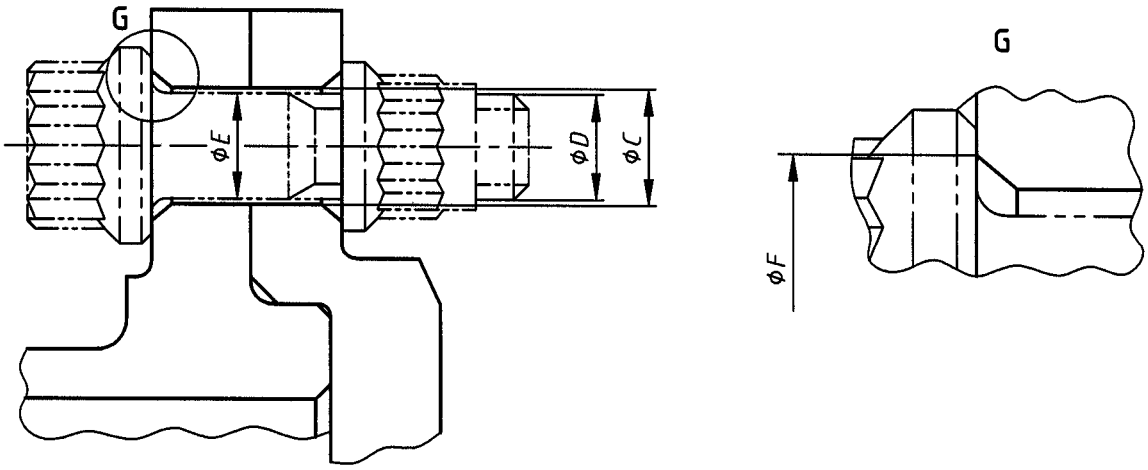

Figure 2

6 Positional tolerance for close clearance applications

Table 5 gives the values of positional tolerances that shall be used with hole sizes from Table 4 for close clearance applications and shall apply at maximum material condition (MMC).

Table 5

Pitch circle diameter		Hole positional tolerance MMC
Over	Up to and including	
0	250	∅ 0,08
250	600	∅ 0,10
600	1 600	∅ 0,12

EXAMPLE The position tolerance gives the relationship between the hole and the datum. See Figure 3.

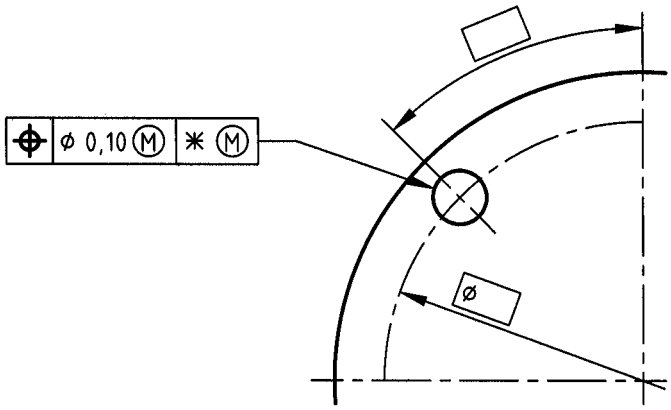

Figure 3