# IEC 62106

Edition 2.0 2009-07

# INTERNATIONAL STANDARD

Specification of the Radio Data System (RDS) for VHF/FM sound broadcasting in the frequency range from 87,5 MHz to 108,0 MHz

Withdrawn
iTeh STANDARD PREVIEW
(standards.iteh.ai)
IEC 62106:2009
https://standards.iteh.ai/catalog/standards/sist/eeed2908-3506-4be1-9e2e-b93cf555da8f/iec-62106-2009

## THIS PUBLICATION IS COPYRIGHT PROTECTED

**Copyright © 2009 IEC, Geneva, Switzerland**

All rights reserved. Unless otherwise specified, no part of this publication may be reproduced or utilized in any form or by any means, electronic or mechanical, including photocopying and microfilm, without permission in writing from either IEC or IEC's member National Committee in the country of the requester.

If you have any questions about IEC copyright or have an enquiry about obtaining additional rights to this publication, please contact the address below or your local IEC member National Committee for further information.



IEC Central Office
3, rue de Varembé
CH-1211 Geneva 20
Switzerland
Email: inmail@iec.ch
Web: www.iec.ch


### About the IEC

The International Electrotechnical Commission (IEC) is the leading global organization that prepares and publishes International Standards for all electrical, electronic and related technologies.

### About IEC publications

The technical content of IEC publications is kept under constant review by the IEC. Please make sure that you have the latest edition, a corrigenda or an amendment might have been published.

- Catalogue of IEC publications: www.iec.ch/searchpub
The IEC on-line Catalogue enables you to search by a variety of criteria (reference number, text, technical committee,…). It also gives information on projects, withdrawn and replaced publications.

- IEC Just Published: www.iec.ch/online_news/justpub
Stay up to date on all new IEC publications. Just Published details twice a month all new publications released. Available on-line and also by email.

- Electropedia: www.electropedia.org
The world's leading online dictionary of electronic and electrical terms containing more than 20 000 terms and definitions in English and French, with equivalent terms in additional languages. Also known as the International Electrotechnical Vocabulary online.

- Customer Service Centre: www.iec.ch/webstore/custserv
If you wish to give us your feedback on this publication or need further assistance, please visit the Customer Service Centre FAQ or contact us:

Email: csc@iec.ch
Tel.: +41 22 919 02 11
Fax: +41 22 919 03 00


Withdrawn
iTeh STANDARD PREVIEW
(standards.iteh.ai)
IEC 62106:2009
https://standards.iteh.ai/catalog/standards/sist/62106-2009

# IEC 62106

Edition 2.0 2009-07

# INTERNATIONAL STANDARD

iTeh STANDARD PREVIEW
(standards.iteh.ai)
IEC 62106:2009
https://standards.iteh.ai/catalog/standards/sist/eea2908-3506-4be1-9e2e-b93cf555da8f/iec-62106-2009
Withdrawn

**Specification of the Radio Data System (RDS) for VHF/FM sound broadcasting in the frequency range from 87,5 MHz to 108,0 MHz**

INTERNATIONAL
ELECTROTECHNICAL
COMMISSION

PRICE CODE XG

ICS 33.060.20; 33.170; 35.240.99

ISBN 978-2-88910-620-2

® Registered trademark of the International Electrotechnical Commission

CONTENTS

FOREWORD ..... 8
1 Scope ..... 10
2 Normative references ..... 10
3 Abbreviations and conventions ..... 10
4 Modulation characteristics of the data channel (physical layer) ..... 11
4.1 General ..... 11
4.2 Subcarrier frequency ..... 11
4.3 Subcarrier phase ..... 13
4.4 Subcarrier level ..... 13
4.5 Method of modulation ..... 13
4.6 Clock-frequency and data-rate ..... 13
4.7 Differential coding ..... 13
4.8 Data-channel spectrum shaping ..... 14
5 Baseband coding (data-link layer) ..... 17
5.1 Baseband coding structure ..... 17
5.2 Order of bit transmission ..... 17
5.3 Error protection ..... 18
5.4 Synchronisation of blocks and groups ..... 19
6 Message format (session and presentation layers) ..... 19
6.1 Addressing ..... 19
6.1.1 Design principles ..... 19
6.1.2 Principal features ..... 20
6.1.3 Group types ..... 21
6.1.4 Open data channel/Applications Identification ..... 23
6.1.5 Coding of the Group types ..... 25
6.2 Coding of information ..... 41
6.2.1 Coding of information for control ..... 42
6.2.2 Coding and use of information for display ..... 50
6.2.3 Coding of Clock Time and date (CT) ..... 51
6.2.4 Coding of information for Transparent Data Channels (TDC) ..... 51
6.2.5 Coding of information for In House applications (IH) ..... 51
6.2.6 Coding of Radio Paging (RP) ..... 51
6.2.7 Coding of Emergency Warning Systems (EWS) ..... 52
7 Description of features ..... 53
7.1 Alternative Frequencies list (AF) ..... 53
7.2 Clock Time and date (CT) ..... 53
7.3 Decoder Identification (DI) and dynamic PTY Indicator (PTYI) ..... 53
7.4 Extended Country Code (ECC) ..... 53
7.5 Enhanced Other Networks information (EON) ..... 53
7.6 Emergency Warning System (EWS) ..... 54
7.7 In House application (IH) ..... 54
7.8 Music Speech switch (MS) ..... 54
7.9 Open Data Applications (ODA) ..... 54
7.10 Programme Identification (PI) ..... 54
7.11 Programme Item Number (PIN) ..... 55
7.12 Programme Service name (PS) ..... 55

Withdrawn
IECNORM.COM : Click to view the full PDF of IEC 62106:2009
Withdrawn
IEC STANDARD PREVIEW
(standards.iteh.ai)
https://standards.iteh.ai/catalog/standards/sist/...-2009

7.13 Programme TYpe (PTY) ..... 55
7.14 Programme TYpe Name (PTYN) ..... 55
7.15 Radio Paging (RP) ..... 55
7.16 RadioText (RT) ..... 56
7.17 Enhanced RadioText (eRT) ..... 56
7.18 RadioText Plus (RT+) ..... 56
7.19 Traffic Announcement identification (TA) ..... 56
7.20 Transparent Data Channels (TDC) ..... 56
7.21 Traffic Message Channel (TMC) ..... 56
7.22 Traffic Programme identification (TP) ..... 56
8 Marking ..... 56
Annex A (normative) Offset words to be used for group and block synchronisation ..... 58
Annex B (informative) Theory and implementation of the modified shortened cyclic code ..... 59
Annex C (informative) Implementation of group and block synchronisation using the modified shortened cyclic code ..... 65
Annex D (normative) Programme identification codes and Extended country codes ..... 68
Annex E (normative) Basic and extended RDS character sets ..... 72
Annex F (normative) Programme type codes ..... 86
Annex G (informative) Conversion between time and date conventions ..... 89
Annex H (informative) ARI (Autofahrer-Rundfunk-Information) system – Discontinuation ..... 91
Annex J (normative) Language identification ..... 92
Annex K (informative) RDS logo ..... 94
Annex L (informative) Open data registration ..... 95
Annex M (normative) Coding of Radio Paging (RP) ..... 98
Annex N (normative) Country codes and extended country codes for countries outside the European Broadcasting Area ..... 130
Annex P (normative) Coding of RadioText Plus information (RT+) ..... 135
Annex Q (normative) Coding of enhanced RadioText (eRT) ..... 147
Annex R (informative) RBDS in the USA ..... 152
Annex S (normative) List of RDS specific abbreviations ..... 153
Bibliography ..... 154

Figure 1 – Block diagram of radio-data equipment at the transmitter ..... 12
Figure 2 – Block diagram of a typical radio-data receiver/decoder ..... 12
Figure 3 – Amplitude response of the specified transmitter or receiver data-shaping filter ..... 15
Figure 4 – Amplitude response of the combined transmitter and receiver data-shaping filters ..... 15
Figure 5 – Spectrum of biphase coded radio-data signals ..... 16
Figure 6 – Time-function of a single biphase symbol ..... 16
Figure 7 – 57 kHz radio-data signals ..... 16
Figure 8 – Structure of the baseband coding ..... 17
Figure 9 – Message format and addressing ..... 18
Figure 10 – ODA version A groups ..... 24

IECNORM.COM : Click to view the full PDF of IEC 62106:2009
Withdrawn
IEC STANDARD PREVIEW
(standards.iteh.ai)

Figure 11 – ODA version B groups ..... 25
Figure 12 – Basic tuning and switching information – Type 0A group ..... 25
Figure 13 – Basic tuning and switching information – Type 0B group ..... 26
Figure 14 – Programme Item Number and slow labelling codes – Type 1A group ..... 27
Figure 15 – Programme Item Number – Type 1B group ..... 28
Figure 16 – RadioText – Type 2A group ..... 28
Figure 17 – RadioText – Type 2B group ..... 29
Figure 18 – Application Identification for Open data – Type 3A group ..... 30
Figure 19 – Open data – Type 3B group ..... 31
Figure 20 – Clock-time and date transmission – Type 4A group ..... 32
Figure 21 – Open data – Type 4B group ..... 32
Figure 22 – Transparent data channels – Type 5A group ..... 33
Figure 23 – Transparent data channels – Type 5B group ..... 33
Figure 24 – In-house applications – Type 6A and 6B group ..... 34
Figure 25 – Radio Paging – Type 7A group ..... 34
Figure 26 – Type 7B group ..... 35
Figure 27 – Traffic Message Channel – Type 8A group ..... 35
Figure 28 – Open data – Type 8B group ..... 35
Figure 29 – Allocation of EWS message bits – Type 9A group ..... 36
Figure 30 – Open data – Type 9B group ..... 36
Figure 31 – Programme Type Name PTYN – Type 10A group ..... 37
Figure 32 – Open data – Type 10B group ..... 37
Figure 33 – Open data – Type 11A and 11B groups ..... 38
Figure 34 – Open data – Type 12A and 12B groups ..... 38
Figure 35 – Enhanced Paging information – Type 13A group ..... 39
Figure 36 – Open data – Type 13B group ..... 40
Figure 37 – Enhanced Other Networks information – Type 14A groups ..... 40
Figure 38 – Enhanced Other Networks information – Type 14B groups ..... 40
Figure 39 – Open data – Type 15A group ..... 41
Figure 40 – Fast basic tuning and switching information – Type 15B group ..... 41
Figure 41 – Structure of Block 3 of Type 1A groups ..... 48
Figure 42 – Structure of variant 12 of block 3 of type 14A groups (linkage information) – National link ..... 49
Figure 43 – Structure of variant 12 of block 3 of type 14A groups (linkage information) – International link ..... 50
Figure 44 – Structure of Variant 7 of Block 3 of type 1A groups for Identification of a programme carrying EWS information ..... 53
Figure B.1 – Generator matrix of the basic shortened cyclic code in binary notation ..... 60
Figure B.2 – Shift-register implementation of the encoder ..... 61
Figure B.3 – Parity-check matrix of the basic shortened cyclic code ..... 62
Figure B.4 – Shift-register implementation of the decoder ..... 63
Figure C.1 – Group and block synchronisation detection circuit ..... 66
Figure D.1 – PI structure ..... 68

Withdrawn
IECNORM.COM : Click to view the full PDF of IEC 62106:2009
Withdrawn
IECNORM.COM : Click to view the full PDF of IEC 62106:2009
Withdrawn

Figure D.2 – Structure of Variant 0 of Block 3 of Type 1A groups (Extended Country Codes) ..... 69
Figure D.3 – Correspondence between geographical locations and the symbols used for the various countries within the European Broadcasting Area as an example ..... 69
Figure G.1 – Conversion routes between Modified Julian Date (MJD) and Coordinated Universal Time (UTC) ..... 89
Figure J.1 – Language identification code allocation ..... 92
Figure M.1 – Group type 7A message format for Radio Paging ..... 101
Figure M.2 – Group type 7A paging without an additional message ..... 102
Figure M.3 – Group type 7A paging with an additional 10 digit message ..... 103
Figure M.4 – Group type 7A paging with an additional 18 digit message ..... 103
Figure M.5 – Group type 7A paging with an additional alphanumeric message ..... 104
Figure M.6 – Group type 7A paging with an additional international 15 digit message ..... 105
Figure M.7 – Functions message in international paging ..... 106
Figure M.8 – Variant 0 of 1A group with PIN ..... 108
Figure M.9 – Variant 2 of 1A group with PIN ..... 109
Figure M.10 – Variants of 1A group without PIN ..... 110
Figure M.11 – Group type 13A ..... 116
Figure M.12 – Tone-only message ..... 118
Figure M.13 – First 7A group of a variable-length message ..... 118
Figure M.14 – Group type 7A national paging with additional alphanumeric message ..... 120
Figure M.15 – Group type 7A national paging with additional variable-length numeric message ..... 121
Figure M.16 – Group type 7A national paging with additional variable-length functions message ..... 122
Figure M.17 – The two first 7A groups of an international alphanumeric message ..... 124
Figure M.18 – The two first 7A groups of an international variable-length numeric message ..... 124
Figure M.19 – The two first 7A groups of an international variable-length functions message ..... 124
Figure M.20 – Traffic handling capacity, busy hour, call rate = 0,10 calls/pager/hour ..... 128
Figure M.21 – Traffic handling capacity, busy hour, call rate = 0,067 calls/pager/hour ..... 129
Figure M.22 – Traffic handling capacity, busy hour, call rate = 0,05 calls/pager/hour ..... 129
Figure P.1 – RT+ information of the category 'Item' (see Table P.2) will be attached to the programme elements Item 1 and Item 2 ..... 140
Figure P.2 – RT+ information of the category 'Item' will be attached to the programme elements Item 1 and Item 2, but not to the programme element News ..... 140
Figure P.3 – RT+ information of the category 'Item' will be attached only to the programme element Item 1, but not to the programme element Talk ..... 140
Figure P.4 – Bit allocation for group 3A (message bits and AID) ..... 141
Figure P.5 – Coding of the message bits of the application group ..... 142
Figure Q.1 – eRT information elements ..... 147
Figure Q.2 – Bit allocation for group 3A (message bits and AID) ..... 148
Figure Q.3 – Coding of the message bits of the application group ..... 149

Withdrawn
iTeh STANDARD PREVIEW
(standards.iteh.ai)
IEC 62106:2009
https://standards.iteh.ai/catalog/standards/sist/ec2e2908-3500-48e1-9e2e-b93e1353da8f/iec-62106-2009

Table 1 – Encoding rules ..... 13
Table 2 – Decoding rules ..... 14
Table 3 – Group types ..... 21
Table 4 – Main feature repetition rates ..... 22
Table 5 – Group repetition rates ..... 23
Table 6 – ODA group availability signalled in type 3A groups ..... 24
Table 7 – STY codes ..... 39
Table 8 – Codes for TP and TA ..... 42
Table 9 – Bit $d_0$ to $d_3$ meanings ..... 42
Table 10 – VHF code table ..... 43
Table 11 – Special meanings code table ..... 43
Table 12 – Code tables according to ITU regions ..... 43
Table A.1 – Offset word codes ..... 58
Table B.1 – Offset word syndromes using matrix of Figure B.3 ..... 63
Table C.1 – Offset word syndromes for group and block synchronisation ..... 67
Table D.1 – PI code structure ..... 68
Table D.2 – Symbols used for ECC and PI country codes for the countries in the European Broadcasting Area ..... 70
Table D.3 – Area coverage codes ..... 71
Table D.4 – Programme reference number codes ..... 71
Table D.5 – PI codes for short range transmitting devices ..... 71
Table E.1 – Basic RDS character set ..... 72
Table E.2 – Extended RDS character set, for eRT only ..... 73
Table F.1 – Programme type codes and corresponding terms for display ..... 86
Table G.1 – Symbols used ..... 89
Table J.1 – Language identification codes ..... 92
Table M.1 – Pager group codes ..... 99
Table M.2 – Codes for additional message contents ..... 102
Table M.3 – Paging segment address codes for 10 and 18 digit messages ..... 104
Table M.4 – Paging segment address codes for alphanumeric messages ..... 105
Table M.5 – Paging segment address codes for international 15 digit messages ..... 106
Table M.6 – Paging segment address codes for functions message ..... 107
Table M.7 – Sub-usage codes ..... 110
Table M.8 – Group designation codes ..... 114
Table M.9 – Cycle selection codes ..... 115
Table M.10 – Message sorting codes ..... 115
Table M.11 – Codes for message types ..... 117
Table M.12 – Description of the control byte ..... 119
Table M.13 – Use of paging call repetition flag ..... 119
Table M.14 – Paging segment address codes for alphanumeric message ..... 120
Table M.15 – Paging segment address codes for variable length numeric message ..... 121
Table M.16 – Paging segment address codes for variable length functions message ..... 123
Table M.17 – Address notification (50 bits) ..... 126

Withdrawn
iTeh STANDARD PREVIEW
(standards.iteh.ai)
IEC 62106:2009
https://standards.iteh.ai/catalog/standards/sist/cbec2908-3506-4be1-9e2e-b93cf555da8f/iec-62106-2009

Table M.18 – Address notification (25 bits) ..... 127
Table M.19 – Z3 parity relationship ..... 127
Table P.1 – RT+ information elements ..... 135
Table P.2 – Code list and 'RT+ class' description of 'RT/eRT content types' ..... 144

Withdrawn
iTeh STANDARD PREVIEW
(standards.iteh.ai)
IEC 62106:2009
https://standards.iteh.ai/catalog/standards/sist/ee2908-3506-4be1-9e2e-b93cf555da8f/iec-62106-2009

INTERNATIONAL ELECTROTECHNICAL COMMISSION

# SPECIFICATION OF THE RADIO DATA SYSTEM (RDS) FOR VHF/FM SOUND BROADCASTING IN THE FREQUENCY RANGE FROM 87,5 MHz TO 108,0 MHz

## FOREWORD

1) The International Electrotechnical Commission (IEC) is a worldwide organization for standardization comprising all national electrotechnical committees (IEC National Committees). The object of IEC is to promote international co-operation on all questions concerning standardization in the electrical and electronic fields. To this end and in addition to other activities, IEC publishes International Standards, Technical Specifications, Technical Reports, Publicly Available Specifications (PAS) and Guides (hereafter referred to as "IEC Publication(s)"). Their preparation is entrusted to technical committees; any IEC National Committee interested in the subject dealt with may participate in this preparatory work. International, governmental and non-governmental organizations liaising with the IEC also participate in this preparation. IEC collaborates closely with the International Organization for Standardization (ISO) in accordance with conditions determined by agreement between the two organizations.
2) The formal decisions or agreements of IEC on technical matters express, as nearly as possible, an international consensus of opinion on the relevant subjects since each technical committee has representation from all interested IEC National Committees.
3) IEC Publications have the form of recommendations for international use and are accepted by IEC National Committees in that sense. While all reasonable efforts are made to ensure that the technical content of IEC Publications is accurate, IEC cannot be held responsible for the way in which they are used or for any misinterpretation by any end user.
4) In order to promote international uniformity, IEC National Committees undertake to apply IEC Publications transparently to the maximum extent possible in their national and regional publications. Any divergence between any IEC Publication and the corresponding national or regional publication shall be clearly indicated in the latter.
5) IEC itself does not provide any attestation of conformity. Independent certification bodies provide conformity assessment services and, in some areas, access to IEC marks of conformity. IEC is not responsible for any services carried out by independent certification bodies.
6) All users should ensure that they have the latest edition of this publication.
7) No liability shall attach to IEC or its directors, employees, servants or agents including individual experts and members of its technical committees and IEC National Committees for any personal injury, property damage or other damage of any nature whatsoever, whether direct or indirect, or for costs (including legal fees) and expenses arising out of the publication, use of, or reliance upon, this IEC Publication or any other IEC Publications.
8) Attention is drawn to the Normative references cited in this publication. Use of the referenced publications is indispensable for the correct application of this publication.
9) Attention is drawn to the possibility that some of the elements of this IEC Publication may be the subject of patent rights. IEC shall not be held responsible for identifying any or all such patent rights.

International Standard IEC 62106 has been prepared by technical area 1: Terminals for audio, video and data services and content, of IEC technical committee 100: Audio, video and multimedia systems and equipment.

This second edition cancels and replaces the first edition, published in 2000 and constitutes a technical revision.

The main changes with respect to the previous edition are listed below.

- the list of RDS country codes, inclusive of the extended country codes, has been updated in Annexes D and N;
- Annex E, containing the character code tables to be used in RDS has been updated;
- RadioText Plus has been added as a new feature in Annex P;
- Enhanced RadioText has been added as a new feature in Annex Q.

Withdrawn

NOTE 1 IEC 62106:2000 (first edition) and IEC 62106:2009 (second edition) have the same main text and annex structure. However, the main text of this edition is slightly restructured to more closely conform to ISO/IEC Directives, Part 2. Nevertheless, cross-referencing between this edition and the previous edition remains possible. To find the corresponding subclause quickly, it is basically sufficient to subtract 3 clauses. Example: see 6.1.5.1 becomes, see 3.1.5.1 in the first edition.

The text of this standard is based on the following documents:

| CDV | Report on voting |
|---|---|
| 100/1454/CDV | 100/1557/RVC |

Full information on the voting for the approval of this standard can be found in the report on voting indicated in the above table.

This publication has been drafted in accordance with the ISO/IEC Directives, Part 2.

NOTE 2 For technical reasons equations and some figures had to be left unchanged and are not in accordance with the ISO/IEC Directives, Part 2.

The committee has decided that the contents of this publication will remain unchanged until the maintenance result date indicated on the IEC web site under "http://webstore.iec.ch" in the data related to the specific publication. At this date, the publication will be

- reconfirmed;
- withdrawn;
- replaced by a revised edition, or
- amended.

A bilingual version of the publication may be issued at a later date.

The contents of the corrigendum of May 2010 have been included in this copy.

iTeh STANDARD PREVIEW
(standards.iteh.ai)
https://standards.iteh.ai/catalog/standards/sist/eea2908-3506-4be1-9e2e-b93cf555da8f/iec-62106-2009
Withdrawn

# SPECIFICATION OF THE RADIO DATA SYSTEM (RDS) FOR VHF/FM SOUND BROADCASTING IN THE FREQUENCY RANGE FROM 87,5 MHz TO 108,0 MHz

## 1 Scope

This International Standard describes the Radio Data System, RDS, intended for application to VHF/FM sound broadcasts in the range 87,5 MHz to 108,0 MHz which may carry either stereophonic (pilot-tone system) or monophonic programmes ( see clause 2 – Normative references ITU-R Recommendations BS 450-3 and BS 643-2). The main objectives of RDS are to enable improved functionality for FM receivers and to make them more user-friendly by using features such as Programme Identification, Programme Service name display and where applicable, automatic tuning for portable and car radios, in particular. The relevant basic tuning and switching information therefore has to be implemented by the type 0 group (see 6.1.5.1), and it is not optional unlike many of the other possible features in RDS.

## 2 Normative references

The following referenced documents are indispensable for the application of this document. For dated references, only the edition cited applies. For undated references, the latest edition of the referenced document (including any amendments) applies.

ISO/IEC 10646, *Information technology – Universal Multiple-Octet Coded Character Set (UCS)*

ISO 14819 (all parts), *Traffic and Traveller Information (TTI) – TTI messages via traffic message Coding (TMC)*

ITU-R Recommendation BS.450-3, *Transmission standards for FM sound broadcasting at VHF*

ITU-R Recommendation BS.643-2, *System for automatic tuning and other applications in FM radio receivers for use with the pilot-tone system*

ITU-T Recommendation E.212, *For the three digit Mobile Country Codes used in Annex M of this RDS specification refer to Complement to ITU-T Rec. E.212 (05/2004) published by ITU Geneva as Annex to ITU Operational Bulletin 897, dated 2007-12-01*

US NRSC-4-A, *National Radio Systems Committee – NRSC-4-A: United States RBDS standard*

ETSI EN 301 700, *Digital Audio Broadcasting (DAB); VHF/FM broadcasting: cross referencing to simulcast DAB services by RDS-ODA 147*

## 3 Abbreviations and conventions

For the purposes of this document, the following terms and definitions apply.

**3.1**
**AM**
amplitude modulation (broadcasting)

Withdrawn
IECNORM.COM : Click to view the full PDF of IEC 62106:2009
(standards.iteh.ai)

**3.2**
**ARI**
Autofahrer-Rundfunk-Information, see annex H

**3.3**
**FM**
frequency modulation (broadcasting)

**3.4**
**group type and version**
RDS uses 16 data groups, 0 to 15, each with either a version A or B. The combination of a particular group and a particular version is then called group type, 0A for example, or type 0A group. For example, type 0 group means version A and B of data group 0.

**3.5**
**hexadecimal notation**
throughout this standard the C notation “0x” is used for hex (base 16) numbers

**3.6**
**LF**
long wave broadcasting frequency band (ITU, Region 1 only)

**3.7**
**MF**
medium wave broadcasting frequency band (ITU, all Regions)

**3.8**
**RDS specific abbreviations and definitions**
see Clause 7 and Annex S

**3.9**
**VHF**
very high frequency broadcasting band, here Band II, that is 87,5 MHz to 108,0 MHz, only (ITU)

## 4 Modulation characteristics of the data channel (physical layer)

### 4.1 General

The Radio Data System is intended for application to VHF/FM sound broadcasting transmitters in the range 87,5 MHz to 108,0 MHz, which carry stereophonic (pilot-tone system) or monophonic sound broadcasts specified in ITU-R Recommendation BS.450-3.

It is important that radio-data receivers are not affected by signals in the multiplex spectrum outside the data channel.

The data signals are carried on a subcarrier which is added to the stereo multiplex signal (or monophonic signal as appropriate) at the input to the VHF/FM transmitter. Block diagrams of the data source equipment at the transmitter and a typical receiver arrangement are shown in Figures 1 and 2, respectively.

### 4.2 Subcarrier frequency

During stereo broadcasts, the subcarrier frequency will be locked to the third harmonic of the 19 kHz pilot-tone. Since the tolerance on the frequency of the 19 kHz pilot-tone is ±2 Hz (ITU-R Recommendation BS.450-3), the tolerance on the frequency of the subcarrier during stereo broadcasts is ±6 Hz.

Withdrawn
iTeh STANDARD PREVIEW
(standards.iteh.ai)
IEC 62106:2009
https://standards.iteh.ai/catalog/standards/sist/eeed2908-3506-4be1-9e2e-b93cf555da8f/iec-62106-2009

During monophonic broadcasts the frequency of the subcarrier will be 57 kHz ± 6 Hz.

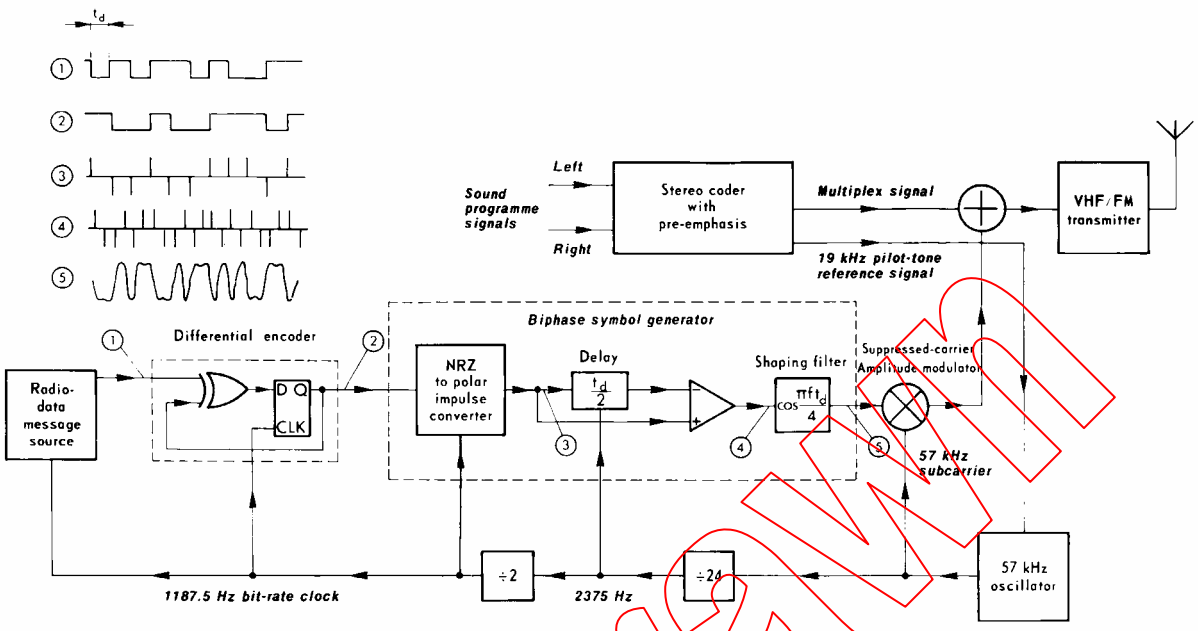


**Figure 1 – Block diagram of radio-data equipment at the transmitter**

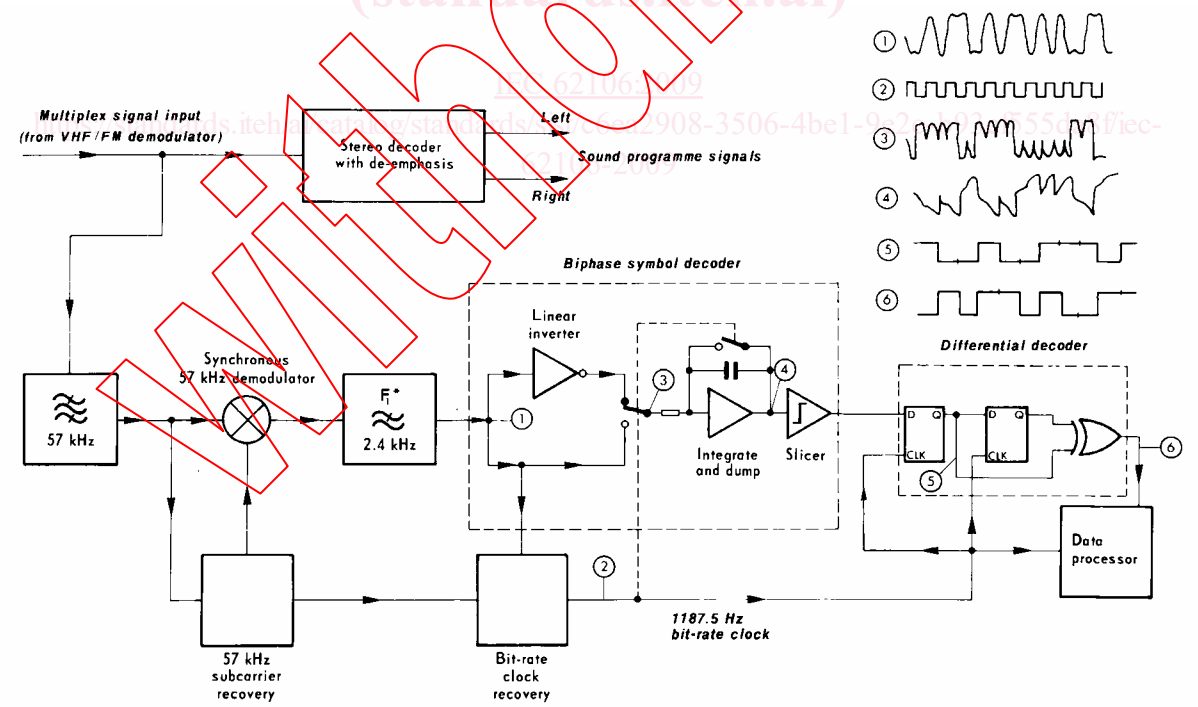


*NOTE The overall data-shaping in this decoder comprises the filter $F_1$ and the data-shaping inherent in the biphase symbol decoder. The amplitude/frequency characteristic of filter $F_1$ is, therefore, not the same as that given in Figure 3.

**Figure 2 – Block diagram of a typical radio-data receiver/decoder**

Withdrawn
iTeh STANDARD PREVIEW
(standards.iteh.ai)

### 4.3 Subcarrier phase

During stereo broadcasts, the subcarrier will be locked either in phase or in quadrature to the third harmonic of the 19 kHz pilot-tone. The tolerance on this phase angle is ± 10º, measured at the modulation input to the FM transmitter.

### 4.4 Subcarrier level

The deviation range of the FM carrier due to the unmodulated subcarrier is from ±1,0 kHz to ±7,5 kHz. The recommended best compromise is ±2,0 kHz (see NOTE). The decoder/ demodulator shall also operate properly when the deviation of the subcarrier is varied within these limits during periods not less than 10 ms.

NOTE With this level of subcarrier, the level of each sideband of the subcarrier corresponds to half the nominal peak deviation level of 2,0 kHz for an 'all-zeroes' message data stream (i.e. a continuous bit-rate sine-wave after biphase encoding).

The maximum permitted deviation due to the composite multiplex signal is ± 75 kHz.

### 4.5 Method of modulation

The subcarrier is amplitude-modulated by the shaped and biphase coded data signal (see 4.8). The subcarrier is suppressed. This method of modulation may alternatively be thought of as a form of two-phase phase-shift-keying (psk) with a phase deviation of ±90º.

### 4.6 Clock-frequency and data-rate

The basic clock frequency is obtained by dividing the transmitted subcarrier frequency by 48. Consequently, the basic data-rate of the system (see Figure 1) is 1187,5 bit/s ± 0,125 bit/s.

### 4.7 Differential coding

The source data at the transmitter are differentially encoded according to the following rules:

**Table 1 – Encoding rules**

| Previous output (at time $t_{i-1}$) | New input (at time $t_i$) | New output (at time $t_i$) |
|---|---|---|
| 0 | 0 | 0 |
| 0 | 1 | 1 |
| 1 | 0 | 1 |
| 1 | 1 | 0 |

where $t_i$ is some arbitrary time and $t_{i-1}$ is the time one message-data clock-period earlier, and where the message-data clock-rate is equal to 1 187,5 Hz.

Thus, when the input-data level is 0, the output remains unchanged from the previous output bit and when an input 1 occurs, the new output bit is the complement of the previous output bit.

In the receiver, the data may be decoded by the inverse process:

iTeh STANDARD PREVIEW
(standards.iteh.ai)
IEC 62106:2009
https://standards.iteh.ai/catalog/standards/sist/eeed2908-3506-4be1-9e2e-b93cf555da8f/iec-62106-2009
Withdrawn