SLOVENSKI STANDARD
SIST EN 3536:2009

01-maj-2009

Aeronavtika - Matice, šestrobe, samozapiralne, iz toplotnoodpornega jekla, namazane z MoS2 - Klasifikacija: 1100 MPa (pri temperaturi okolice)/315 °C

Aerospace series - Nuts, hexagon, self-locking, in heat resisting steel, MoS2 lubricated - Classification: 1 100 MPa (at ambient temperature)/315 °C

Luft- und Raumfahrt - Sechskantmuttern, selbstsichernd, aus hochwarmfestem Stahl, MoS2-geschmiert - Klasse: 1 100 MPa (bei Raumtemperatur)/315 °C

Série aérospatiale - Ecrous hexagonaux, à freinage interne, en acier résistant à chaud, lubrifiés MoS2 - Classification: 1 100 MPa (à température ambiante)/315 °C

Ta slovenski standard je istoveten z: EN 3536:2006

ICS:

49.030.30 Matice Nuts

SIST EN 3536:2009 en,de

EUROPEAN STANDARD

NORME EUROPÉENNE

EUROPÄISCHE NORM

EN 3536

July 2006

ICS 49.030.30

English Version

Aerospace series - Nuts, hexagon, self-locking, in heat resisting steel, MoS_2 lubricated - Classification: 1 100 MPa (at ambient temperature)/315 °C

Série aérospatiale - Ecrous hexagonaux, à freinage interne, en acier résistant à chaud, lubrifiés MoS_2 - Classification: 1 100 MPa (à température ambiante)/315 °C

Luft- und Raumfahrt - Sechskantmuttern, selbstsichernd, aus hochwarmfestem Stahl, MoS_2-geschmiert - Klasse: 1 100 MPa (bei Raumtemperatur)/315 °C

This European Standard was approved by CEN on 9 March 2006.

CEN members are bound to comply with the CEN/CENELEC Internal Regulations which stipulate the conditions for giving this European Standard the status of a national standard without any alteration. Up-to-date lists and bibliographical references concerning such national standards may be obtained on application to the Central Secretariat or to any CEN member.

This European Standard exists in three official versions (English, French, German). A version in any other language made by translation under the responsibility of a CEN member into its own language and notified to the Central Secretariat has the same status as the official versions.

CEN members are the national standards bodies of Austria, Belgium, Cyprus, Czech Republic, Denmark, Estonia, Finland, France, Germany, Greece, Hungary, Iceland, Ireland, Italy, Latvia, Lithuania, Luxembourg, Malta, Netherlands, Norway, Poland, Portugal, Romania, Slovakia, Slovenia, Spain, Sweden, Switzerland and United Kingdom.

EUROPEAN COMMITTEE FOR STANDARDIZATION
COMITÉ EUROPÉEN DE NORMALISATION
EUROPÄISCHES KOMITEE FÜR NORMUNG

Management Centre: rue de Stassart, 36 B-1050 Brussels

Ref. No. EN 3536:2006: E

Contents

Page

Foreword

This European Standard (EN 3536:2006) has been prepared by the AeroSpace and Defense Industries Association of Europe - Standardization (ASD-STAN).

After enquiries and votes carried out in accordance with the rules of this Association, this Standard has received the approval of the National Associations and the Official Services of the member countries of ASD, prior to its presentation to CEN.

This European Standard shall be given the status of a national standard, either by publication of an identical text or by endorsement, at the latest by January 2007, and conflicting national standards shall be withdrawn at the latest by January 2007.

Attention is drawn to the possibility that some of the elements of this document may be the subject of patent rights. CEN [and/or CENELEC] shall not be held responsible for identifying any or all such patent rights.

According to the CEN/CENELEC Internal Regulations, the national standards organizations of the following countries are bound to implement this European Standard: Austria, Belgium, Cyprus, Czech Republic, Denmark, Estonia, Finland, France, Germany, Greece, Hungary, Iceland, Ireland, Italy, Latvia, Lithuania, Luxembourg, Malta, Netherlands, Norway, Poland, Portugal, Romania, Slovakia, Slovenia, Spain, Sweden, Switzerland and the United Kingdom.

1 Scope

This standard specifies characteristics of self-locking hexagonal nuts, with flange, in heat resisting steel, MoS_2 lubricated.

Classification: 1 100 MPa[1] / 315 °C[2].

2 Normative references

The following referenced documents are indispensable for the application of this document. For dated references, only the edition cited applies. For undated references, the latest edition of the referenced document (including any amendments) applies.

EN 2000, *Aerospace series — Quality assurance — EN aerospace products — Approval of the quality system of manufacturers*

EN 2424, *Aerospace series — Marking of aerospace products*

EN 2491, *Aerospace series — Molybdenum disulphide dry lubricants — Coating methods*

EN 9133, *Aerospace series — Quality management systems — Qualification procedure for aerospace standard parts*

ISO 5855-2, *Aerospace — MJ threads — Part 2: Limit dimensions for bolts and nuts*

ISO 5858, *Aerospace — Self-locking nuts with maximum operating temperature less than or equal to 425 °C — Procurement specification*

ISO 7995, *Aerospace — Nuts, hexagonal, self-locking, with MJ threads, classifications: 1 100 MPa (at ambient temperature)/315 °C and 1 100 MPa (at ambient temperature/425 °C — Dimensions*

ISO 8788 *Aerospace — Fasteners — Tolerances of form and position*

TR 3791, *Aerospace series — Materials for all metal self-locking nuts and thin wall insert of temperature classes ≤ 425 °C*[3]

---

1) Corresponds to the minimum tensile stress which the nut is able to withstand at ambient temperature without breaking or cracking when tested with a bolt of a higher strength class.

2) Maximum temperature that the nut is able to withstand, without permanent alteration to its original characteristics, after ambient temperature has been restored. The maximum temperature is conditioned by the cadmium plating.

3) Published ASD Technical Report at the date of publication of this standard.

3 Required characteristics

3.1 Configuration — Dimensions — Masses

See Figure 1 and Table 1.

Dimensions and tolerances are: in conformity with ISO 7995, expressed in millimetres and apply before MoS_2 lubricating.

Details of form not stated are at the manufacturer's option.

3.2 Tolerances of form and position

See ISO 8788.

3.3 Materials

See TR 3791.

3.4 Surface treatments

EN 2491, thickness not specified.

6,3 [1,6] a

Remove sharp edges 0,1 to 0,4

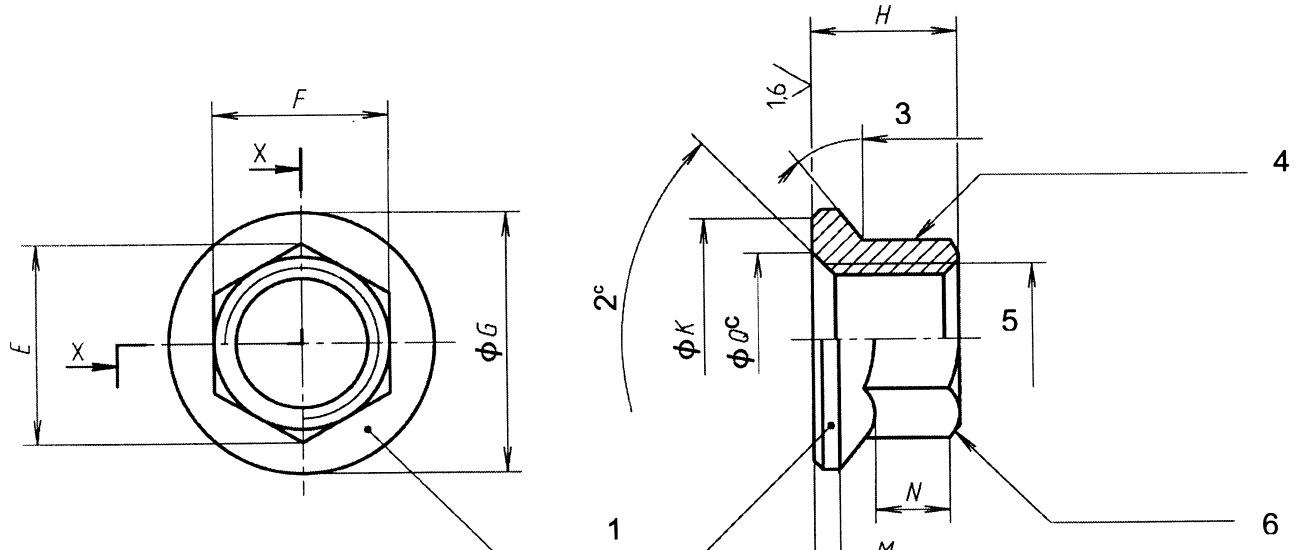

Key

1 Marking 2 90° to 120° 3 0° to 50°

4 Form out-of-round in this area to achieve the self-locking torque requirement[b]

5 Thread 6 Chamfer, radius or broken edge

a These values in micrometres apply before surface treatment. They do not apply to threads and sheared edges the surface texture of which will be as achieved by usual manufacturing methods.

b Tooling marks are permitted in this area.

c All forms of entry (chamfer or radius) are permissible within these limiting dimensions.

Figure 1

Table 1

Diameter code	Thread[a]	E[b] min.	F[b]		G max.	H max.	K min.	M min.	N[c] min.	Q max.	Q min.	Mass[d]
030	MJ3x0,5-4H6H	4,2	4	h12	6	3	5,3	0,4	1,2	3,8	3,2	0,35
040	MJ4x0,7-4H6H	5,3	5		7,4	4	6,7	0,5	1,5	4,8	4,2	0,7
050	MJ5x0,8-4H6H	6,5	6		9,1	5	8,3	0,6	2	5,8	5,2	1,05
060	MJ6x1-4H5H	7,6	7		10,6	5,4	9,8	0,7	2,3	7,1	6,3	1,5
070	MJ7x1-4H5H	8,7	8		12,1	6,3	11,3	0,8	2,7	8,1	7,3	2,45
080	MJ8x1-4H5H	10,9	10	h13	13,6	7,2	12,8	0,9	3,2	9,1	8,3	3,6
100	MJ10x1,25-4H5H	13,2	12		16,8	9	15,8	1,1	3,8	11,1	10,3	6,25
120	MJ12x1,25-4H5H	15,5	14		19,9	10,8	18,8	1,4	4,5	13,5	12,3	10,35
140	MJ14x1,5-4H5H	17,9	16		23	12,6	21,9	1,7	5	15,1	14,3	13,2

a In accordance with ISO 5855-2. In the self-locking zone the tolerances apply before forming out-of-round.

b These dimensions apply before forming out-of-round, but finished nuts shall fit a standard socket wrench.

c Wrench pad engagement

d Approximate values (kg/1 000 pieces), given for information purposes only