SLOVENSKI STANDARD
SIST EN 3561:2004

01-maj-2004

Aerospace series - Pipe coupling 8°30' in titanium alloy - Ferrules with dynamic beam seal end, welded and reduced at pipe end

Aerospace series - Pipe coupling 8°30' in titanium alloy - Ferrules with dynamic beam seal end, welded and reduced at pipe end

Luft- und Raumfahrt - Rohrverschraubung 8°30' aus Titanlegierung - Stutzen mit Dichtlippe und Anschweißende reduziertes Rohrende

Série aérospatiale - Systéme de raccordement 8°30' en alliage de titane - Olives soudées de réduction avec levre d'étanchéite

Ta slovenski standard je istoveten z: EN 3561:2001

ICS:

49.080	Letalski in vesoljski hidravliļ ni sistemi in deli	Aerospace fluid systems and components

SIST EN 3561:2004 **en**

EUROPEAN STANDARD

NORME EUROPÉENNE

EUROPÄISCHE NORM

EN 3561

October 2001

ICS 49.080

English version

Aerospace series - Pipe coupling 8°30' in titanium alloy - Ferrules with dynamic beam seal end, welded and reduced at pipe end

Série aérospatiale - Système de raccordement 8°30' en alliage de titane - Olives soudées de réduction avec lèvre d'étanchéite

Luft- und Raumfahrt - Rohrverschraubung 8°30' aus Titanlegierung - Stutzen mit Dichtlippe und Anschweißende reduziertes

This European Standard was approved by CEN on 20 January 2001.

CEN members are bound to comply with the CEN/CENELEC Internal Regulations which stipulate the conditions for giving this European Standard the status of a national standard without any alteration. Up-to-date lists and bibliographical references concerning such national standards may be obtained on application to the Management Centre or to any CEN member.

This European Standard exists in three official versions (English, French, German). A version in any other language made by translation under the responsibility of a CEN member into its own language and notified to the Management Centre has the same status as the official versions.

CEN members are the national standards bodies of Austria, Belgium, Czech Republic, Denmark, Finland, France, Germany, Greece, Iceland, Ireland, Italy, Luxembourg, Netherlands, Norway, Portugal, Spain, Sweden, Switzerland and United Kingdom.

EUROPEAN COMMITTEE FOR STANDARDIZATION
COMITÉ EUROPÉEN DE NORMALISATION
EUROPÄISCHES KOMITEE FÜR NORMUNG

Management Centre: rue de Stassart, 36 B-1050 Brussels

Ref. No. EN 3561:2001 E

Foreword

This European Standard has been prepared by the European Association of Aerospace Manufacturers (AECMA).

After inquiries and votes carried out in accordance with the rules of this Association, this Standard has received the approval of the National Associations and the Official Services of the member countries of AECMA, prior to its presentation to CEN.

This European Standard shall be given the status of a national standard, either by publication of an identical text or by endorsement, at the latest by April 2002, and conflicting national standards shall be withdrawn at the latest by April 2002.

According to the CEN/CENELEC Internal Regulations, the national standards organizations of the following countries are bound to implement this European Standard: Austria, Belgium, Czech Republic, Denmark, Finland, France, Germany, Greece, Iceland, Ireland, Italy, Luxembourg, Netherlands, Norway, Portugal, Spain, Sweden, Switzerland and the United Kingdom.

1 Scope

This standard specifies the characteristics for ferrules with a dynamic beam seal end, welded and reduced at pipe end for pipe couplings 8°30', in titanium alloy, for aerospace applications.

Nominal pressure: up to 28 000 kPa

Temperature range: – 55 °C to + 135 °C

2 Normative references

This European Standard incorporates by dated or undated reference provisions from other publications. These normative references are cited at the appropriate places in the text and the publications are listed hereafter. For dated references, subsequent amendments to or revisions of any of these publications apply to this European Standard only when incorporated in it by amendment or revision. For undated references, the latest edition of the publication referred to applies (including amendments).

EN 2424 Aerospace series – Marking of aerospace products

EN 2656 Aerospace series – Pipe coupling – Coupling ends, welded – Geometric configuration

EN 3272 Aerospace series – Pipe coupling 8°30' – Dynamic beam seal end for ferrules, welded – Geometric configuration

EN 3275 Aerospace series – Pipe coupling 8°30' up to 28 000 kPa – Dynamic beam seal – Metric series – Technical specification

EN 3311 Aerospace series – Titanium alloy TI-P64001 – Annealed – Bar for machining – $D \leq 150$ mm[1)]

EN 3314 Aerospace series – Titanium alloy TI-P64001 – Solution treated and aged – Bar for machining – $D \leq 75$ mm[1)]

1) Published as AECMA Prestandard at the date of publication of this standard

3 Required characteristics

3.1 Configuration – Dimensions – Mass

According to figure 1 and table 1

The pipe nominal outside diameter of dynamic beam seal end (DN1) shall be larger than the pipe nominal outside diameter of the pipe weld end (DN2).

3.2 Surface roughness

According to figure 1, unless otherwise specified in the design documentation

3.3 Materials

According to EN 3311 or EN 3314

Dimensions in millimetres

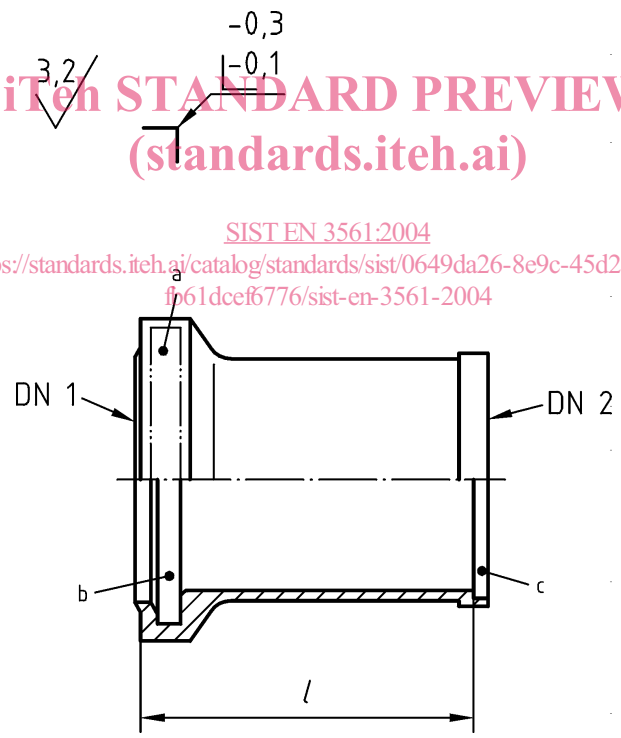

a Area for marking

b According to EN 2656

c According to EN 3272

Figure 1

Table 1

Dimensions in millimetres

Code[a b]	DN 1	DN 2	l $^{0}_{-0,2}$	Mass g/piece max.
060504	06	05	17	1,49
060505				1,58
080605	08	06	17	2,04
080504		05		2,13
080505				2,23
100805	10	08	17	2,76
100806				2,89
100605		06		2,94
121005	12	10	18	3,30
121008				3,88
120805		08		3,56
120806				3,71
141205	14	12	20	3,11
141206				3,38
141209				4,15
141005		10		3,45
141008				4,10
161405	16	14	22	5,10
161408				6,15
161410				6,79
161205		12		5,53
161206				5,83
161209				6,69
181605	18	16	22	5,79
181606				6,20
181610				7,74
181612				8,48
181405		14		6,30
181408				7,35
181410				7,99
201805	20	18	24	8,62
201807				9,63
201810				11,07
201813				12,45
201605		16		9,40
201606				9,85
201610				11,56
201612				12,38

Code[a b]	DN 1	DN 2	l $^{0}_{-0,2}$	Mass g/piece max.
222006	22	20	26	9,92
222007				10,54
222012				13,43
222015				15,10
221805		18		10,18
221807				11,30
221810				12,87
221813				14,38
252208	25	22	29	14,39
252212				17,29
252216				20,10
252006		20		13,85
252007				14,55
252012				17,83
252015				19,72
282508	28	25	29	16,12
282509				16,96
282514				21,05
282518				24,21
282208		22		17,44
282212				20,65
282216				23,44
322808	32	28	30	18,44
322810				20,36
322816				26,06
322820				29,70
322508		25		20,35
322509				21,21
322514				25,44
322518				28,69

[a] Corresponds to the pipe nominal outside diameter of dynamic beam seal end (DN 1), pipe weld end (DN 2) and pipe wall thickness (DN 2)

[b] Relationship between code and pressure classification, according to EN 2656 and/or EN 3272

4 Designation

EXAMPLE:

Description block	Identitiy block
FERRULE	EN3561 100806

Number of this standard

Code (see table 1)

NOTE : If necessary, the code I9005 shall be placed between the description block and the identity block.

5 Marking

According to EN 2424, style F plus manufacturing date or batch number and figure 1.
According to EN 2424, style G.

6 Technical specification

According to EN 3275, type II