SLOVENSKI STANDARD
SIST EN 3748:2004

01-maj-2004

Aerospace series - O-ring grooves - Dimensions

Aerospace series - O-ring grooves - Dimensions

Luft- und Raumfahrt - Nuten für O-Ringe - Maße

Série aérospatiale - Gorges pour joints toriques - Dimensions

Ta slovenski standard je istoveten z: **EN 3748:2001**

ICS:

49.080	Letalski in vesoljski hidravliļ ni sistemi in deli	Aerospace fluid systems and components

SIST EN 3748:2004 **en**

EUROPEAN STANDARD

NORME EUROPÉENNE

EUROPÄISCHE NORM

EN 3748

November 2001

ICS 49.080

English version

Aerospace series - O-ring grooves - Dimensions

Série aérospatiale - Gorges pour joints toriques - Dimensions

Luft- und Raumfahrt - Nuten für O-Ringe - Maße

This European Standard was approved by CEN on 11 August 2001.

CEN members are bound to comply with the CEN/CENELEC Internal Regulations which stipulate the conditions for giving this European Standard the status of a national standard without any alteration. Up-to-date lists and bibliographical references concerning such national standards may be obtained on application to the Management Centre or to any CEN member.

This European Standard exists in three official versions (English, French, German). A version in any other language made by translation under the responsibility of a CEN member into its own language and notified to the Management Centre has the same status as the official versions.

CEN members are the national standards bodies of Austria, Belgium, Czech Republic, Denmark, Finland, France, Germany, Greece, Iceland, Ireland, Italy, Luxembourg, Netherlands, Norway, Portugal, Spain, Sweden, Switzerland and United Kingdom.

EUROPEAN COMMITTEE FOR STANDARDIZATION
COMITÉ EUROPÉEN DE NORMALISATION
EUROPÄISCHES KOMITEE FÜR NORMUNG

Management Centre: rue de Stassart, 36 B-1050 Brussels

Ref. No. EN 3748:2001 E

Foreword

This European Standard has been prepared by the European Association of Aerospace Manufacturers (AECMA).

After inquiries and votes carried out in accordance with the rules of this Association, this Standard has received the approval of the National Associations and the Official Services of the member countries of AECMA, prior to its presentation to CEN.

This European Standard shall be given the status of a national standard, either by publication of an identical text or by endorsement, at the latest by May 2002, and conflicting national standards shall be withdrawn at the latest by May 2002.

According to the CEN/CENELEC Internal Regulations, the national standards organizations of the following countries are bound to implement this European Standard: Austria, Belgium, Czech Republic, Denmark, Finland, France, Germany, Greece, Iceland, Ireland, Italy, Luxembourg, Netherlands, Norway, Portugal, Spain, Sweden, Switzerland and the United Kingdom.

Contents

1 Scope

This standard specifies the dimensions of grooves for use with o-rings according to EN-standards for aerospace applications:

- radial sealing: rod or bore mounted o-rings;
- axial sealing: internal or external pressure source.

2 Normative references

This European Standard incorporates by dated or undated reference provisions from other publications. These normative references are cited at the appropriate places in the text and the publications are listed hereafter. For dated references, subsequent amendments to or revisions of any of these publications apply to this European Standard only when incorporated in it by amendment or revision. For undated references, the latest edition of the publication referred to applies (including amendments).

ISO 286-2 ISO system of limits and fits – Part 2: Tables of standard tolerance grades and limit deviations for holes and shafts

EN 3049 Aerospace series – O-rings, in fluorocarbon rubber (FKM), low compression set – Hardness 80 IRHD

EN 3746 Aerospace series – O-rings, in fluorosilicone rubber (FVMQ) – Hardness 80 IRHD [1)]

TR 4271 Aerospace series – O-rings grooves – Design criteria for o-ring grooves – Basic calculations [2)]

3 Symbols

b : o-ring groove width
d_1 : o-ring inside diameter
d_2 : o-ring section diameter
d_3 : o-ring groove diameter, rod mounted
d_4 : bore diameter, rod mounted
d_5 : rod outside diameter, bore mounted
d_6 : o-ring groove diameter, bore mounted
d_7 : o-ring groove outside diameter, internal pressure
d_8 : o-ring groove inside diameter, external pressure
d_9 : rod outside diameter, rod mounted
d_{10} : bore diameter, bore mounted
h : groove height
R : edge radius on groove
r_1 : corner radius on groove
t : housing depth
Z : lead-in chamfer length

4 Required characteristics

4.1 Configuration - Dimensions - Tolerances

Only recommended sizes are given in the tables. They are applicable to EN 3049 and EN 3746. For other groove or o-ring, refer to TR 4271.

Dimensions and tolerances are in millimetres. Surface roughness values are in micrometres.

1) Published as AECMA Prestandard at the date of publication of this standard
2) Published as AECMA Technical Report at the date of publication of this standard

4.1.1 Radial sealing – Rod housing: Configuration code A

This configuration corresponds to radial grooves in static applications, rod mounted. See figure 1 and tables 1 to 7.

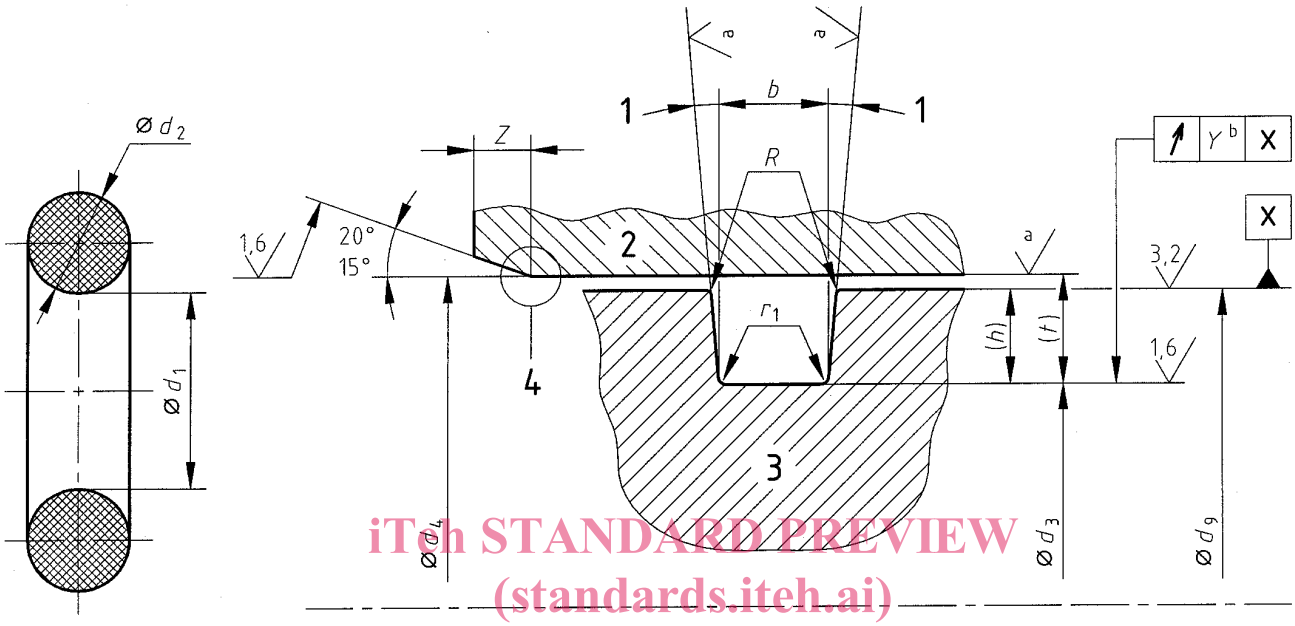

Key

1 0° to 5°
2 Bore
3 Rod
4 No burrs permitted in this area

[a] See table 1.
[b] Groove diameter $d_3 \leq 50$: maximum run-out tolerance $Y = 0{,}025$
Groove diameter $d_3 > 50$: maximum run-out tolerance $Y = 0{,}05$

Figure 1

Table 1

Surface		Roughness							
		R_a				R max.			
		continuous pressure		with pressure variation		continuous pressure		with pressure variation	
		≤ 5 MPa	> 5 MPa	≤ 5 MPa	> 5 MPa	≤ 5 MPa	> 5 MPa	≤ 5 MPa	> 5 MPa
Groove	Side surfaces	3,2	1,6	1,6	1,6	12,5	6,3	6,3	6,3
	Inside diameter	1,6				6,3			
Homologous surface					0,8				3,2

Table 2

d_2	b		Z	r_1		R	
nom.	max.	min.	min.	max.	min.	max.	min.
1,80	2,65	2,40	1,1	0,4	0,2	0,3	0,1
2,65	3,85	3,60	1,5				
3,55	5,05	4,80	1,8	0,8	0,4		
5,30	7,35	7,10	2,7				
7,00	9,45	9,20	3,6	1,2	0,8		

4.1.1.1 Section diameter d_2 = 1,80

Table 3

d_1		d_3	d_4	d_9
Code [a]	nom.	$^{0}_{-0,04}$	$^{+0,06}_{0}$	f7 [b]
A0040	4,00	4,24	7,00	7,00
A0050	5,00	5,27	8,03	8,03
A0060	6,00	6,30	9,06	9,06
A0069	6,90	7,24	10,00	10,00
A0087	8,75	9,12	11,88	11,88
A0106	10,60	11,02	13,78	13,78
A0125	12,50	12,97	15,73	15,73
A0140	14,00	14,54	17,30	17,30
A0160	16,00	16,64	19,40	19,40
A0180	18,00	18,64	21,40	21,40
A0212	21,20	21,94	24,70	24,70
A0236	23,60	24,44	27,20	27,20
A0280	28,00	28,94	31,70	31,70
A0315	31,50	32,54	35,30	35,30
A0355	35,50	36,64	39,40	39,40
A0365	36,50	37,64	40,40	40,40
A0375	37,50	38,64	41,40	41,40
A0387	38,70	39,84	42,60	42,60
A0400	40,00	41,24	44,00	44,00

[a] Size code corresponding to the codification of o-rings, according to aerospace series EN standards.
[b] See ISO 286-2.

4.1.1.2 Section diameter d_2 = 2,65

Table 4

d_1		d_3	d_4	d_9
Code [a]	nom.	$^{0}_{-0,05}$	$^{+0,07}_{0}$	f7 [b]
B0053	5,30	5,58	9,72	9,72
B0069	6,90	7,25	11,39	11,39
B0095	9,50	9,90	14,04	14,04
B0112	11,20	11,66	15,80	15,80
B0132	13,20	13,76	17,90	17,90
B0150	15,00	15,56	19,70	19,70
B0170	17,00	17,66	21,80	21,80
B0200	20,00	20,66	24,80	24,80
B0224	22,40	23,16	27,30	27,30
B0265	26,50	27,36	31,50	31,50
B0300	30,00	30,96	35,10	35,10
B0345	34,50	35,56	39,70	39,70
B0387	38,70	39,86	44,00	44,00
B0437	43,70	45,06	49,20	49,20
B0500	50,00	51,46	55,60	55,60
B0560	56,00	57,66	61,80	61,80
B0600	60,00	61,76	65,90	65,90
B0650	65,00	66,86	71,00	71,00
B0710	71,00	73,06	77,20	77,20
B0750	75,00	77,16	81,30	81,30
B0800	80,00	82,26	86,40	86,40

[a] Size code corresponding to the codification of o-rings, according to aerospace series EN standards.
[b] See ISO 286-2.

4.1.1.3 Section diameter d_2 = 3,55

Table 5

d_1		d_3	d_4	d_9
Code [a]	nom.	$^{0}_{-0,06}$	$^{+0,08}_{0}$	f7 [b]
C0250	25,00	25,82	31,30	31,30
C0300	30,00	31,02	36,50	36,50
C0355	35,50	36,62	42,10	42,10
C0425	42,50	43,82	49,30	49,30
C0487	48,70	50,12	55,60	55,60
C0545	54,50	56,12	61,60	61,60
C0615	61,50	63,32	68,80	68,80
C0710	71,00	73,02	78,50	78,50
C0800	80,00	82,32	87,80	87,80
C0900	90,00	92,52	98,00	98,00
C1000	100,00	102,82	108,30	108,30
C1120	112,00	115,12	120,60	120,60
C1150	115,00	118,22	123,70	123,70
C1220	122,00	125,32	130,80	130,80
C1320	132,00	135,62	141,10	141,10
C1400	140,00	143,82	149,30	149,30
C1500	150,00	154,12	159,60	159,60
C1600	160,00	164,32	169,80	169,80
C1700	170,00	174,62	180,10	180,10
C1800	180,00	189,92	195,40	195,40
C1900	190,00	195,12	200,60	200,60
C2000	200,00	205,32	210,80	210,80
C2120	212,00	217,62	223,10	223,10
C2240	224,00	229,92	235,40	235,40
C2360	236,00	242,32	247,80	247,80
C2500	250,00	256,62	262,10	262,10

[a] Size code corresponding to the codification of o-rings, according to aerospace series EN standards.
[b] See ISO 286-2.

4.1.1.4 Section diameter d_2 = 5,30

Table 6

d_1		d_3	d_4	d_9
Code [a]	nom.	$^{0}_{-0,07}$	$^{+0,09}_{0}$	f7 [b]
D0600	60,00	61,82	70,20	70,20
D0710	71,00	73,02	81,40	81,40
D0800	80,00	82,32	90,70	90,70
D0900	90,00	92,52	100,90	100,90
D1090	109,00	112,02	120,40	120,40
D1120	112,00	115,12	123,50	123,50
D1180	118,00	121,22	129,60	129,60
D1280	128,00	131,52	139,90	139,90
D1360	136,00	139,72	148,10	148,10
D1450	145,00	148,92	157,30	157,30
D1550	155,00	159,22	167,60	167,60
D1650	165,00	169,42	177,80	177,80
D1750	175,00	179,72	188,10	188,10
D1850	185,00	190,02	198,40	198,40
D1950	195,00	200,22	208,60	208,60
D2000	200,00	205,32	213,70	213,70

[a] Size code corresponding to the codification of o-rings, according to aerospace series EN standards.
[b] See ISO 286-2.

4.1.1.5 Section diameter d_2 = 7,00

Table 7

d_1		d_3	d_4	d_9
Code [a]	nom.	$^{0}_{-0,09}$	$^{+0,11}_{0}$	f7 [b]
E1090	109,00	112,06	123,40	123,40
E1150	115,00	118,26	129,60	129,60
E1250	125,00	128,46	139,80	139,80
E1360	136,00	139,76	151,10	151,10
E1450	145,00	148,96	160,30	160,30
E1550	155,00	159,26	170,60	170,60
E1650	165,00	169,46	180,80	180,80
E1750	175,00	179,76	191,10	191,10
E1850	185,00	189,96	201,30	201,30
E1900	190,00	195,16	206,50	206,50
E2000	200,00	205,36	216,70	216,70
E2120	212,00	217,66	229,00	229,00
E2240	224,00	229,86	241,20	241,20
E2300	230,00	236,16	247,50	247,50
E2430	243,00	249,46	260,80	260,80
E2500	250,00	256,66	268,00	268,00
E2580	258,00	264,86	276,20	276,20
E2720	272,00	279,26	290,60	290,60
E2800	280,00	287,46	298,80	298,80
E2900	290,00	297,66	309,00	309,00
E3000	300,00	307,96	319,30	319,30
E3150	315,00	323,36	334,70	334,70
E3250	325,00	333,56	344,90	344,90
E3350	335,00	343,86	355,20	355,20
E3450	345,00	354,06	365,40	365,40
E3550	355,00	364,36	375,70	375,70
E3650	365,00	374,56	385,90	385,90
E3750	375,00	384,86	396,20	396,20
E3870	387,00	397,16	408,50	408,50
E4000	400,00	410,46	421,80	421,80

[a] Size code corresponding to the codification of o-rings, according to aerospace series EN standards.
[b] See ISO 286-2.

4.1.2 Radial sealing – Bore housing: Configuration code B

This configuration (not recommanded) corresponds to radial grooves in static applications, bore mounted. See figure 2 and tables 8 to 14.

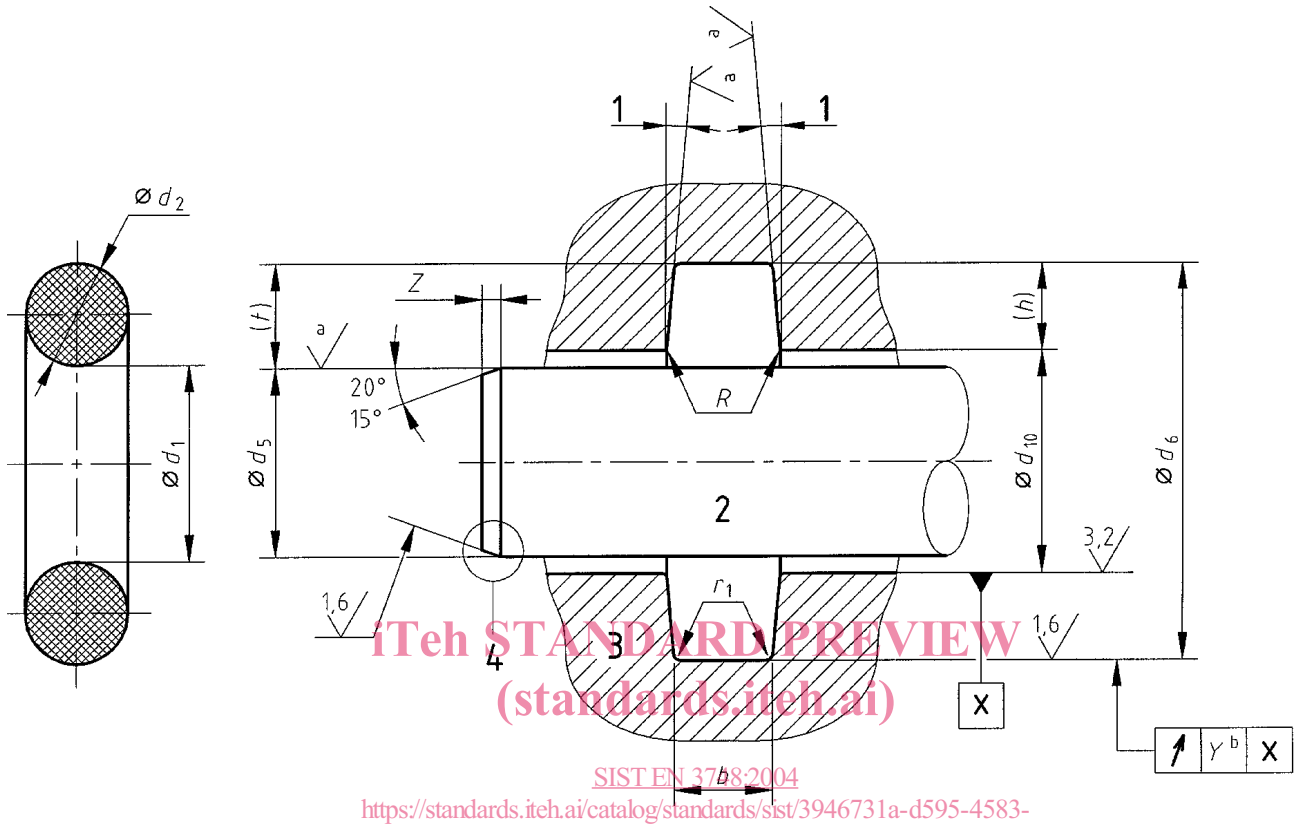

Key

1 0° to 5°
2 Rod
3 Bore
4 No burrs permitted in this area

[a] See table 8.
[b] Groove diameter $d_6 \leq 50$: maximum run-out tolerance $Y = 0{,}025$
Groove diameter $d_6 > 50$: maximum run-out tolerance $Y = 0{,}05$

Figure 2

Table 8

Surface		Roughness							
		R_a				R max.			
		continuous pressure		with pressure variation		continuous pressure		with pressure variation	
		≤ 5 MPa	> 5 MPa	≤ 5 MPa	> 5 MPa	≤ 5 MPa	> 5 MPa	≤ 5 MPa	> 5 MPa
Groove	Side surfaces	3,2	1,6	1,6	1,6	12,5	6,3	6,3	6,3
	Inside diameter	1,6				6,3			
Homologous surface					0,8				3,2