SLOVENSKI STANDARD

SIST EN 3155-018:2006

01-september-2006

Aeronavtika ï Elektriļ ni kontakti za uporabo v veznih elementih ï 018. del: Elektriļ ni kontakti, moġki, tip A, nagubani, razred S ï Standard za proizvod

Aerospace series - Electrical contacts used in elements of connection - Part 018: Contacts, electrical, male, type A, crimp, class S - Product standard

Luft- und Raumfahrt - Elektrische Kontakte zur Verwendung in Verbindungselementen - Teil 018: Elektrische Stiftkontakte, Typ A, crimpbar, Klasse S - Produktnorm

iTeh STANDARD PREVIEW
(standards.iteh.ai)

Série aérospatiale - Contacts électriques utilisés dans les organes de connexion et optique - Partie 018 : Contacts électriques, mâles, type A, a sertir, classe S - Norme de produit

SIST EN 3155-018:2006
https://standards.iteh.ai/catalog/standards/sist/84dba766-3fab-47b1-aa6d-b4f096a9e28b/sist-en-3155-018-2006

Ta slovenski standard je istoveten z: EN 3155-018:2005

ICS:

49.060

SIST EN 3155-018:2006 en

2003-01.Slovenski inštitut za standardizacijo. Razmnoževanje celote ali delov tega standarda ni dovoljeno.

iTeh STANDARD PREVIEW
(standards.iteh.ai)

SIST EN 3155-018:2006
https://standards.iteh.ai/catalog/standards/sist/84dba766-3fab-47b1-aa6d-b4f096a9e28b/sist-en-3155-018-2006

EUROPEAN STANDARD

NORME EUROPÉENNE

EUROPÄISCHE NORM

EN 3155-018

December 2005

ICS 49.060

English Version

Aerospace series - Electrical contacts used in elements of connection - Part 018: Contacts, electrical, male, type A, crimp, class S - Product standard

Série aérospatiale - Contacts électriques utilisés dans les organes de connexion et optique - Partie 018 : Contacts électriques, mâles, type A, à sertir, classe S - Norme de produit

Luft- und Raumfahrt - Elektrische Kontakte zur Verwendung in Verbindungselementen - Teil 018: Elektrische Stiftkontakte, Typ A, crimpbar, Klasse S - Produktnorm

This European Standard was approved by CEN on 26 September 2005.

CEN members are bound to comply with the CEN/CENELEC Internal Regulations which stipulate the conditions for giving this European Standard the status of a national standard without any alteration. Up-to-date lists and bibliographical references concerning such national standards may be obtained on application to the Central Secretariat or to any CEN member.

iTeh STANDARD PREVIEW
(standards.iteh.ai)

This European Standard exists in three official versions (English, French, German). A version in any other language made by translation under the responsibility of a CEN member into its own language and notified to the Central Secretariat has the same status as the official versions.

CEN members are the national standards bodies of Austria, Belgium, Cyprus, Czech Republic, Denmark, Estonia, Finland, France, Germany, Greece, Hungary, Iceland, Ireland, Italy, Latvia, Lithuania, Luxembourg, Malta, Netherlands, Norway, Poland, Portugal, Slovakia, Slovenia, Spain, Sweden, Switzerland and United Kingdom.

SIST EN 3155-018:2006
https://standards.iteh.ai/catalog/standards/sist/84dba766-31ab-47b1-aa0d-b4f096a9e28b/sist-en-3155-018-2006

EUROPEAN COMMITTEE FOR STANDARDIZATION
COMITÉ EUROPÉEN DE NORMALISATION
EUROPÄISCHES KOMITEE FÜR NORMUNG

Management Centre: rue de Stassart, 36 B-1050 Brussels

© 2005 CEN All rights of exploitation in any form and by any means reserved worldwide for CEN national Members.

Ref. No. EN 3155-018:2005: E

Contents

Foreword 3
Introduction 4
1 Scope 4
2 Normative references 4
3 Terms and definitions 5
4 Required characteristics 5
5 Designation 13
6 Marking 13
7 Technical specification 13

iTeh STANDARD PREVIEW
(standards.iteh.ai)

SIST EN 3155-018:2006
https://standards.iteh.ai/catalog/standards/sist/84dba766-3fab-47b1-aa6d-b4f096a9e28b/sist-en-3155-018-2006

Foreword

This European Standard (EN 3155-018:2005) has been prepared by the European Association of Aerospace Manufacturers - Standardization (AECMA-STAN).

After enquiries and votes carried out in accordance with the rules of this Association, this Standard has received the approval of the National Associations and the Official Services of the member countries of AECMA, prior to its presentation to CEN.

This European Standard shall be given the status of a national standard, either by publication of an identical text or by endorsement, at the latest by June 2006, and conflicting national standards shall be withdrawn at the latest by June 2006.

Attention is drawn to the possibility that some of the elements of this document may be the subject of patent rights. CEN [and/or CENELEC] shall not be held responsible for identifying any or all such patent rights.

According to the CEN/CENELEC Internal Regulations, the national standards organizations of the following countries are bound to implement this European Standard: Austria, Belgium, Cyprus, Czech Republic, Denmark, Estonia, Finland, France, Germany, Greece, Hungary, Iceland, Ireland, Italy, Latvia, Lithuania, Luxembourg, Malta, Netherlands, Norway, Poland, Portugal, Slovakia, Slovenia, Spain, Sweden, Switzerland and the United Kingdom.

iTeh STANDARD PREVIEW
(standards.iteh.ai)

SIST EN 3155-018:2006
https://standards.iteh.ai/catalog/standards/sist/84dba766-3fab-47b1-aa6d-b4f096a9e28b/sist-en-3155-018-2006

Introduction

The contacts defined by this standard are derived from those of MIL-C-39029/4 and, intermateable with those of MIL-C-39029/5.

1 Scope

This standard specifies the required characteristics, tests and tooling applicable to male contacts 018, type A, crimp, class S, used in elements of connection according to EN 3155-002.

It shall be used together with EN 3155-001.

The associated female contacts are defined in EN 3155-019.

2 Normative references

The following referenced documents are indispensable for the application of this document. For dated references, only the edition cited applies. For undated references, the latest edition of the referenced document (including any amendments) applies.

iTeh STANDARD PREVIEW
(standards.iteh.ai)

ISO 8843, *Aircraft — Crimp-removable contacts for electrical connectors — Identification system.*

EN 2083, *Aerospace series — Copper or copper alloy conductors for electrical cables — Product standard.*

SIST EN 3155-018:2006
https://standards.iteh.ai/catalog/standards/sist/84dba766-3fab-47b1-aa6d-
0f8e2d7a4a4a/sist-en-3155-018-2006

EN 2591*, *Aerospace series — Elements of electrical and optical connection — Test methods — General.*

EN 3155-001, *Aerospace series — Electrical contacts used in elements of connection — Part 001: Technical specification.*[1)]

EN 3155-002, *Aerospace series — Electrical contacts used in elements of connection — Part 002: List and utilization of contacts.*[1)]

EN 3155-019, *Aerospace series — Electrical contacts used in elements of connection — Part 019: Contacts, electrical, female, type A, crimp, class S — Product standard.*

MIL-DTL-22520, *Crimping tools, terminal, hand or power actuated, wire termination, and tool kits general specification for.*[2)]

---

* All its parts quoted in this standard.

1) Published as AECMA Prestandard at the date of publication of this standard.

2) Published by: Department of Defense (DOD), the Pentagon, Washington D.C. 20301 USA

MIL-C-39029, *Contacts, electrical connector, general specification for.*[2)]

MIL-C-39029/4, *Contacts, electrical connector pin, crimp removable, (for MIL-C-26482 series 2, MIL-C-81703 series 3, MIL-C-83723 series I and III, and MIL-C-83733 connectors).*[2)]

MIL-C-39029/5, *Contacts, electrical connector socket, crimp removable, (for MIL-C-26482 series 2, MIL-C-81703 series 3, MIL-C-83723 series I and III, and MIL-C-83733 connectors and MIL-S-12883/40 and /41 relay sockets).*[2)]

MIL-I-81969, *Installing and removal tools, connector electrical contact, general specification for.*[2)]

3 Terms and definitions

For the purposes of this standard, the terms and definitions given in EN 3155-001 apply.

4 Required characteristics

4.1 Specific characteristics

Type A contacts are for general application and class S corresponds to an operating temperature range from – 65 °C to 200 °C.

iTeh STANDARD PREVIEW
(standards.iteh.ai)

SIST EN 3155-018:2006
https://standards.iteh.ai/catalog/standards/sist/84dba766-3fab-47b1-aa6d-b4f096a9e28b/sist-en-3155-018-2006

4.2 Dimensions and mass

See Figure 1, Figure 2 and Table 1.

Dimensions and tolerances are given in millimetres and apply after surface treatment.

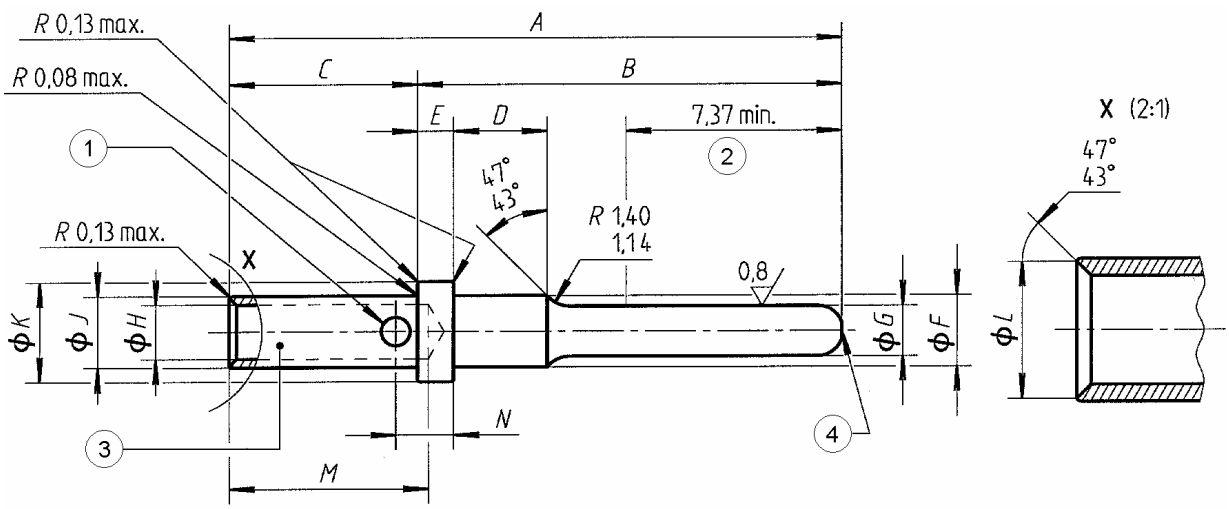

Key

1 Ø P (one side only)
2 Contact active area protection
3 Colour bands, see Table 2.
4 Flat Ø S

iTeh STANDARD PREVIEW
(standards.iteh.ai)
SIST EN 3155-018:2006
https://standards.iteh.ai/catalog/standards/sist/84dba766-3fab-47b1-aa6d-b4f096a9e28b/sist-en-3155-018-2006

Figure 1

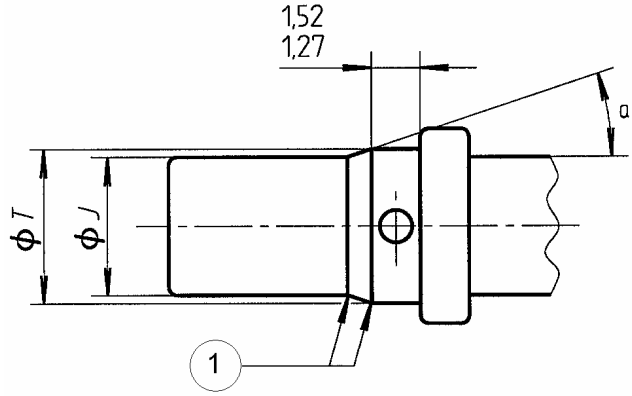

Key

1 Radii

[a] 28° to 32° for contact 20-22 and, 14° to 16° for other contacts

Figure 2 — Barrel, contacts 20-22, 16-18, 12-12 and 12-18

Table 1

Size		*A*	*B*	*C*	*D*	*E*	*F*	*G*	*H*	*J*
Contact	**Barrel**	max.								
20	22	18,29	13,94 13,79	4,34 4,06	3,30 3,17	0,84 0,74	1,98 1,93	1,04 0,99	0,90 0,85	1,22 1,17
20	20	18,29	13,94 13,79	4,34 4,06	3,30 3,17	0,84 0,74	1,98 1,93	1,04 0,99	1,27 1,22	1,98 1,93
20	18	18,29	13,94 13,79	4,34 4,06	3,30 3,17	0,84 0,74	1,98 1,93	1,04 0,99	1,35 1,30	1,98 1,93
16	16	20,85	14,33 14,17	6,53 6,25	3,30 3,17	1,22 1,12	2,62 2,56	1,61 1,56	1,73 1,68	2,62 2,56
16	14	20,85	14,33 14,17	6,53 6,25	3,30 3,17	1,22 1,12	2,62 2,56	1,61 1,56	1,95 1,90	2,62 2,56
16	18	20,85	14,33 14,17	6,53 6,25	3,30 3,17	1,22 1,12	2,62 2,56	1,61 1,56	1,35 1,30	1,98 1,93
12	12	20,85	14,33 14,17	6,53 6,25	3,05 2,92	1,22 1,12	3,83 3,76	2,41 2,36	2,59 2,49	3,83 3,76
12	18	20,85	14,33 14,17	6,53 6,25	3,05 2,92	1,22 1,12	3,83 3,76	2,41 2,36	1,35 1,30	1,98 1,93

iTeh STANDARD PREVIEW
(standards.iteh.ai)
SIST EN 3155-018:2006
https://standards.iteh.ai/catalog/standards/sist/84dba766-3fab-47b1-aa6d-b4f096a9e28b/sist-en-3155-018-2006

Size		*K*	*L*	*M*	*N*	*P*	*S*	*T*	**Mass** g max.
Contact	**Barrel**								
20	22	2,62 2,54	1,16 1,01	4,75 3,94	1,73 1,35	0,56 0,46	0,51 0,13	1,98 1,93	0,30
20	20	2,62 2,54	1,68 1,57	4,75 3,94	1,73 1,35	0,81 0,66	0,51 0,13	–	0,30
20	18	2,62 2,54	1,68 1,57	4,75 3,94	1,73 1,35	0,81 0,66	0,51 0,13	–	0,30
16	16	3,38 3,30	2,26 2,11	7,21 6,35	2,16 1,73	1,07 0,91	0,81 0,43	–	0,65
16	14	3,38 3,30	2,26 2,11	7,21 6,35	2,16 1,73	1,07 0,91	0,81 0,43	–	0,65
16	18	3,38 3,30	1,68 1,57	7,21 6,35	2,16 1,73	1,07 0,91	0,81 0,43	2,62 2,56	0,65
12	12	4,83 4,75	3,45 3,30	7,21 6,35	2,16 1,73	1,07 0,91	1,57 1,19	4,01 3,94	1,36
12	18	4,83 4,75	1,68 1,57	7,21 6,35	2,16 1,73	1,07 0,91	1,57 1,19	4,01 3,94	1,36

4.3 Marking by colour code

See Table 2.