SLOVENSKI STANDARD
SIST EN 3782:2008

01-september-2008

Aeronavtika - Luknje za vijake z ugrezno glavo (100°) - Standard za projektiranje

Aerospace series - Holes for 100° countersunk head screws - Design standard

Luft- und Raumfahrt - Löcher für 100°-Senkschrauben - Konstruktionsnorm

Série aérospatiale - Trous pour vis à tête fraisée 100° - Norme de conception

Ta slovenski standard je istoveten z: EN 3782:2008

ICS:

49.030.01 Vezni elementi na splošno Fasteners in general

SIST EN 3782:2008 **en**

EUROPEAN STANDARD

NORME EUROPÉENNE

EUROPÄISCHE NORM

EN 3782

May 2008

ICS 49.030.01

English Version

Aerospace series - Holes for 100° countersunk head screws - Design standard

Série aérospatiale - Trous pour vis à tête fraisée 100° - Norme de conception

Luft- und Raumfahrt - Löcher für 100° -Senkschrauben - Konstruktionsnorm

This European Standard was approved by CEN on 3 November 2007.

CEN members are bound to comply with the CEN/CENELEC Internal Regulations which stipulate the conditions for giving this European Standard the status of a national standard without any alteration. Up-to-date lists and bibliographical references concerning such national standards may be obtained on application to the CEN Management Centre or to any CEN member.

This European Standard exists in three official versions (English, French, German). A version in any other language made by translation under the responsibility of a CEN member into its own language and notified to the CEN Management Centre has the same status as the official versions.

CEN members are the national standards bodies of Austria, Belgium, Bulgaria, Cyprus, Czech Republic, Denmark, Estonia, Finland, France, Germany, Greece, Hungary, Iceland, Ireland, Italy, Latvia, Lithuania, Luxembourg, Malta, Netherlands, Norway, Poland, Portugal, Romania, Slovakia, Slovenia, Spain, Sweden, Switzerland and United Kingdom.

EUROPEAN COMMITTEE FOR STANDARDIZATION
COMITÉ EUROPÉEN DE NORMALISATION
EUROPÄISCHES KOMITEE FÜR NORMUNG

Management Centre: rue de Stassart, 36 B-1050 Brussels

Ref. No. EN 3782:2008: E

Contents

Page

Figures

Tables

Foreword

This document (EN 3782:2008) has been prepared by the Aerospace and Defence Industries Association of Europe - Standardization (ASD-STAN).

After enquiries and votes carried out in accordance with the rules of this Association, this Standard has received the approval of the National Associations and the Official Services of the member countries of ASD, prior to its presentation to CEN.

This European Standard shall be given the status of a national standard, either by publication of an identical text or by endorsement, at the latest by November 2008, and conflicting national standards shall be withdrawn at the latest by November 2008.

Attention is drawn to the possibility that some of the elements of this document may be the subject of patent rights. CEN [and/or CENELEC] shall not be held responsible for identifying any or all such patent rights.

According to the CEN/CENELEC Internal Regulations, the national standards organizations of the following countries are bound to implement this European Standard: Austria, Belgium, Bulgaria, Cyprus, Czech Republic, Denmark, Estonia, Finland, France, Germany, Greece, Hungary, Iceland, Ireland, Italy, Latvia, Lithuania, Luxembourg, Malta, Netherlands, Norway, Poland, Portugal, Romania, Slovakia, Slovenia, Spain, Sweden, Switzerland and the United Kingdom.

1 Scope

This standard specifies holes in common parts and sheet metal for 100° countersunk head screws with nominal diameters of 3 mm to 5 mm and head configuration according to EN standards for aerospace applications.

2 Use

2.1 Normal application

Underflush condition, i. e. where units are mounted on top of the screws, use dimensions P_1 (see Table 1).

2.2 Aerodynamic application

Proud to underflush condition i.e. where the screws are adjacent to gaseous flow, use dimensions P_2 (see Table 2).

3 Required characteristics

See Figures 1 and 2 and Tables 1 and 2.

Dimensions in millimetres

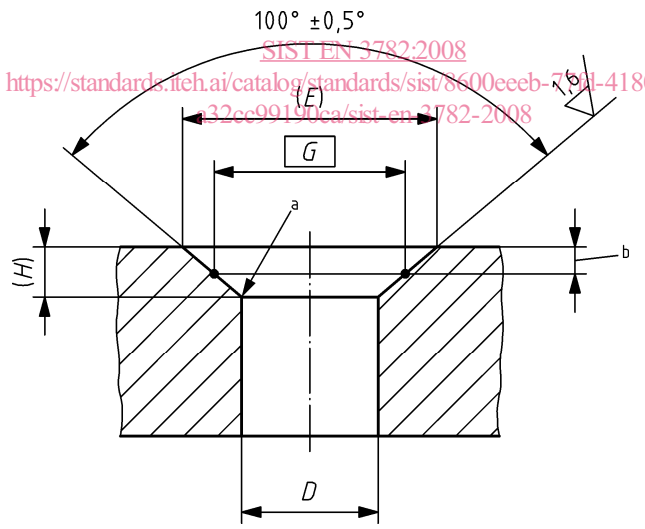

a deburred 0,1 to 0,5

b P_1 underflush condition
P_2 proud to underflush condition

Figure 1 — Countersunk holes in common parts

Dimensions in millimetres

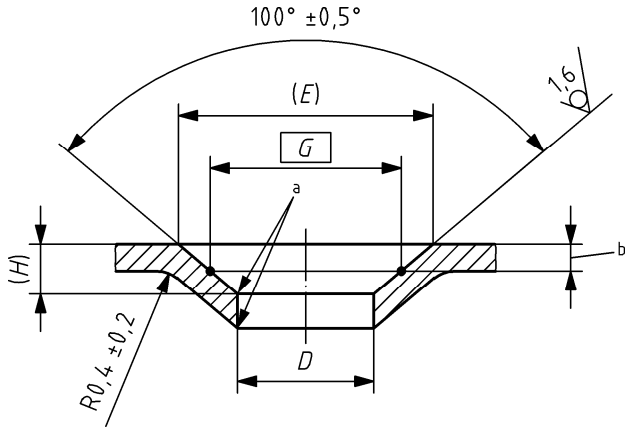

a deburred 0,1 to 0,5

b P_1 underflush condition
P_2 proud to underflush condition

Figure 2 — Countersunk holes in sheet metal

Table 1 — Hole sizes for normal application (underflush condition)

Screw thread diameter code	Screw thread designation	Hole diameter ∅ D mm tol. H13	Sinking diameter ∅ E[a] mm	Gauge diameter ∅ G mm	Depth H[a] mm	P_1 0,10 to 0,38 underflush mm
N030	MJ3 × 0,5 – 4h 6h	3,3 + 0,18	6,2	4,50	1,2	0,73 + 0,2
N040	MJ4 × 0,7 – 4h 6h	4,4 + 0,18	8,2	5,78	1,6	1,03 + 0,2
N050	MJ5 × 0,8 – 4h 6h	5,5 + 0,18	10,2	7,71	2,0	1,06 + 0,2

a For information only.

Table 2 — Hole sizes for aerodynamic application (proud to underflush condition)

Screw thread diameter code	Screw thread designation	Hole diameter ∅ D mm tol. H13	Sinking diameter ∅ E[a] mm	Gauge diameter ∅ G mm	Depth H[a] mm	P_2 0,10 proud to 0,13 underflush mm
A030	MJ3 × 0,5 – 4h 6h	3,3 + 0,18	5,75	4,50	1,0	0,53 + 0,15
A040	MJ4 × 0,7 – 4h 6h	4,4 + 0,18	7,75	5,78	1,4	0,83 + 0,15
A050	MJ5 × 0,8 – 4h 6h	5,5 + 0,18	9,75	7,71	1.8	0,86 + 0,15

a For information only.

4 Designation

EXAMPLE

Description block	Identity block
Hole	EN 3782 — N050

Number of EN standard

Diameter code (see Table 1 or Table 2)

5 Indication in drawings

EXAMPLE

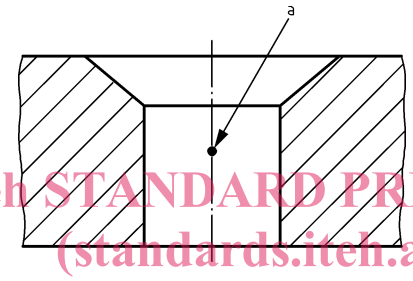

a Hole EN 3782-N050

Figure 3 — Indication in drawings

Alternatively the hole may be fully dimensioned in the drawing.