SLOVENSKI STANDARD
SIST EN 4125:2010

01-marec-2010

Aeronavtika - Zakovne matice, samovarovalne, fiksne, dvostranske, skrajšana serija, z izvrtino za valjaste vijake, iz toplotnoodpornega jekla, mazane z MoS2 - Klasifikacija: 900 MPa (pri temperaturi okolice)/315 °C

Aerospace series - Nuts, anchor, self-locking, fixed, two lug, reduced series, with incremental counterbore, in heat resisting steel, MoS2 lubricated - Classification: 900 MPa (at ambient temperature)/315 °C

Luft- und Raumfahrt - Annietmuttern, selbstsichernd, beiderseitig verkürzter Flansch, mit tiefer zylindrischer Aussenkung, aus hochwarmfestem Stahl, MoS2-geschmiert - Klasse: 900 MPa (bei Raumtemperatur) / 315 °C

Série aérospatiale - Écrous à river, à freinage interne, fixes, double patte, série réduite, avec chambrage très profond, en acier résistant à chaud, lubrifiés MoS2 - Classification: 900 MPa (à température ambiante)/315 °C

Ta slovenski standard je istoveten z: EN 4125:2010

ICS:

49.030.30 Matice Nuts

SIST EN 4125:2010 en,de

EUROPEAN STANDARD

NORME EUROPÉENNE

EUROPÄISCHE NORM

EN 4125

January 2010

ICS 49.030.30

English Version

Aerospace series - Nuts, anchor, self-locking, fixed, two lug, reduced series, with incremental counterbore, in heat resisting steel, MoS_2 lubricated - Classification: 900 MPa (at ambient temperature) / 315 °C

Série aérospatiale - Écrous à river, à freinage interne, fixes, double patte, série réduite, avec chambrage très profond, en acier résistant à chaud, lubrifiés MoS_2 - Classification : 900 MPa (à température ambiante) / 315 °C

Luft- und Raumfahrt - Annietmuttern, selbstsichernd, beiderseitig verkürzter Flansch, mit tiefer zylindrischer Aussenkung, aus hochwarmfestem Stahl, MoS_2-geschmiert - Klasse: 900 MPa (bei Raumtemperatur) / 315 °C

This European Standard was approved by CEN on 21 November 2009.

CEN members are bound to comply with the CEN/CENELEC Internal Regulations which stipulate the conditions for giving this European Standard the status of a national standard without any alteration. Up-to-date lists and bibliographical references concerning such national standards may be obtained on application to the CEN Management Centre or to any CEN member.

This European Standard exists in three official versions (English, French, German). A version in any other language made by translation under the responsibility of a CEN member into its own language and notified to the CEN Management Centre has the same status as the official versions.

CEN members are the national standards bodies of Austria, Belgium, Bulgaria, Croatia, Cyprus, Czech Republic, Denmark, Estonia, Finland, France, Germany, Greece, Hungary, Iceland, Ireland, Italy, Latvia, Lithuania, Luxembourg, Malta, Netherlands, Norway, Poland, Portugal, Romania, Slovakia, Slovenia, Spain, Sweden, Switzerland and United Kingdom.

EUROPEAN COMMITTEE FOR STANDARDIZATION
COMITÉ EUROPÉEN DE NORMALISATION
EUROPÄISCHES KOMITEE FÜR NORMUNG

Management Centre: Avenue Marnix 17, B-1000 Brussels

Ref. No. EN 4125:2010: E

Contents

Page

Foreword 3
1 Scope 4
2 Normative references 4
3 Required characteristics 5
4 Designation 7
5 Marking 8
6 Technical specification 8

Foreword

This document (EN 4125:2010) has been prepared by the Aerospace and Defence Industries Association of Europe - Standardization (ASD-STAN).

After enquiries and votes carried out in accordance with the rules of this Association, this Standard has received the approval of the National Associations and the Official Services of the member countries of ASD, prior to its presentation to CEN.

This European Standard shall be given the status of a national standard, either by publication of an identical text or by endorsement, at the latest by July 2010, and conflicting national standards shall be withdrawn at the latest by July 2010.

Attention is drawn to the possibility that some of the elements of this document may be the subject of patent rights. CEN [and/or CENELEC] shall not be held responsible for identifying any or all such patent rights.

According to the CEN/CENELEC Internal Regulations, the national standards organizations of the following countries are bound to implement this European Standard: Austria, Belgium, Bulgaria, Croatia, Cyprus, Czech Republic, Denmark, Estonia, Finland, France, Germany, Greece, Hungary, Iceland, Ireland, Italy, Latvia, Lithuania, Luxembourg, Malta, Netherlands, Norway, Poland, Portugal, Romania, Slovakia, Slovenia, Spain, Sweden, Switzerland and the United Kingdom.

1 Scope

This standard specifies the characteristics of self-locking two lug, reduced series, incremental counterbored fixed anchor nuts, in heat resisting steel, MoS_2 lubricated.

Classification: 900 MPa[1)] / 315 °C[2)].

2 Normative references

The following referenced documents are indispensable for the application of this document. For dated references, only the edition cited applies. For undated references, the latest edition of the referenced document (including any amendments) applies.

EN 2398, *Aerospace series — Heat resisting steel FE-PA2601 (X6NiCrTiMoV26-15) — $R_m \geq 900$ MPa — Bars for machined bolts — D ≤ 25 mm*

EN 2399, *Aerospace series — Heat resisting steel FE-PA2601 (X4NiCrTiMoV26-15) — $R_m \geq 900$ MPa — Bars for forged bolts — D ≤ 25 mm*

EN 2424, *Aerospace series — Marking of aerospace products*

EN 2491, *Aerospace series — Molybdenum disulphide dry lubricants — Coating methods*

EN 3638, *Aerospace series — Heat resisting alloy FE-PA2601 (X6NiCrTiMoV26-15) — Consumable electrode remelted — Solution and precipitation treated — Sheet, strip and plate — 0,5 mm ≤ a ≤ 10 mm*

EN 3639, *Aerospace series — Heat resisting alloy FE-PA2601 — Softened and cold worked — Wire for forged fasteners — D ≤ 15 mm — 900 MPa ≤ R_m ≤ 1100 MPa*[3)]

EN 9100, *Quality Management Systems — Requirements for Aviation, Space and Defense Organizations*

EN 9133, *Aerospace series — Quality management systems — Qualification procedure for aerospace standard parts*

TR 3791, *Aerospace series — Materials for self-locking nuts, threaded inserts and screw thread inserts of temperature classes ≤ 425 °C*[4)]

ISO 5855-2, *Aerospace — MJ threads — Part 2: Limit dimensions for bolts and nuts*

ISO 5858, *Aerospace — Nuts, self-locking, with maximum operating temperature less than or equal to 425 °C — Procurement specification*

ISO 8788, *Aerospace — Nuts, metric — Tolerances of form and position*

---

1) Corresponds to the minimum tensile stress which the nut is able to withstand at ambient temperature without breaking or cracking when tested with a bolt of a higher strength class.

2) Maximum temperature that the nut is able to withstand, without permanent alteration to its original characteristics, after ambient temperature has been restored. The maximum temperature is conditioned by the surface treatment.

3) Published as ASD-STAN Prestandard at the date of publication of this standard.

4) Published as ASD-STAN Technical Report at the date of publication of this standard.

3 Required characteristics

3.1 Configuration — Dimensions — Masses

See Figure 1 and Table 1.

Dimensions and tolerances are expressed in millimetres and apply before MoS_2 lubrication.

Details of form not stated are at the manufacturer's option.

3.2 Tolerances of form and position

ISO 8788.

3.3 Materials

EN 2398, EN 2399, EN 3638, EN 3639 or TR 3791.

3.4 Surface treatment

EN 2491, thickness not specified.

6,3 [3,2] These values in micrometres apply before surface treatment. The values do not apply to threads and sheared edges the surface texture of which will be achieved by usual manufacturing methods.

Remove sharp edges 0,1 to 0,4.

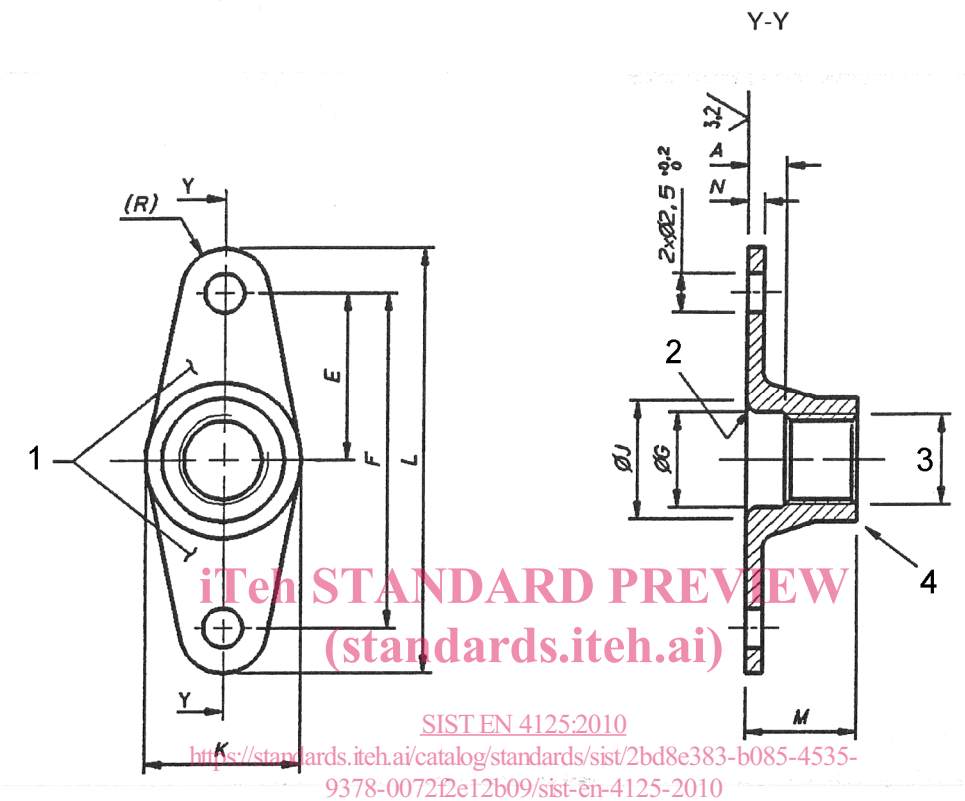

Key

1 Marking
2 Radius or chamfer
3 Thread
4 Form out-of-round in this area to achieve self-locking. Tooling marks are permitted in this area.

Figure 1

Table 1

Diameter code	Thread [a]	*A* Counterbore code	*A* Counterbore min.	*E*	*F*	*G* min.	*J* [b] max.	*K* max.	*L* max.	*M* max.	*N* [c] max.	*R*	Mass [d]
050	MJ5×0,8-4H6H	04	4	7	14	5,5	7,3	9	19,2	8,5	1,1	2,5	1,2
		06	6							10,5			1,7
		08	8							12,5			2,1
		10	10							14,5			2,5
060	MJ6×1-4H5H	04	4	8	16	6,5	8,7	10	22,2	9,4	1,35	3	1,8
		06	6							11,4			2,1
		08	8							13,4			2,5
		10	10							15,4			3,0

[a] In accordance with ISO 5855-2. In the self-locking zone, the tolerances apply before forming out-of-round.

[b] Is to sharp corners (chamfered) or point of tangency (radiused).

[c] Is applicable at the rivet hole location.

[d] Approximate values (kg/1 000 pieces), calculated on the basis of 7,85 kg/dm^3, given for information purposes only.

4 Designation

EXAMPLE

Description block	Identity block
NUT	EN4125-06008

Number of this standard

Diameter code (see Table 1)

Counterbore code (see Table 1)

NOTE If necessary the originator code I9005 shall be placed between the description block and the identity block.