SLOVENSKI STANDARD
SIST EN 2913:2001

01-januar-2001

Aerospace series - Washers, flat, large diameter, in steel, cadmium plated

Aerospace series - Washers, flat, large diameter, in steel, cadmium plated

Luft- und Raumfahrt - Scheiben, flach, großer Außendurchmesser, aus Stahl, verkadmet

Série aérospatiale - Rondelles plates larges, en acier, cadmiées

iTeh STANDARD PREVIEW
(standards.iteh.ai)

Ta slovenski standard je istoveten z: **EN 2913:1999**

SIST EN 2913:2001
https://standards.iteh.ai/catalog/standards/sist/cf1fda8b-3852-49cb-bf16-bf753ae7c0ad/sist-en-2913-2001

ICS:

49.030.50	Podložke in drugi blokirni elementi	Washers and other locking elements

SIST EN 2913:2001 **en**

2003-01.Slovenski inštitut za standardizacijo. Razmnoževanje celote ali delov tega standarda ni dovoljeno.

SIST EN 2913:2001

iTeh STANDARD PREVIEW
(standards.iteh.ai)

SIST EN 2913:2001
https://standards.iteh.ai/catalog/standards/sist/cf1fda8b-3852-49cb-bf16-bf753ae7c0ad/sist-en-2913-2001

SIST EN 2913:2001

EUROPEAN STANDARD
NORME EUROPÉENNE
EUROPÄISCHE NORM

EN 2913

December 1999

ICS 49.030.50

Supersedes EN 2913:1996 + AC:1998

English version

Aerospace series - Washers, flat, large diameter, in steel, cadmium plated

Série aérospatiale - Rondelles plates larges, en acier, cadmiées

Luft- und Raumfahrt - Scheiben, flach, großer Außendurchmesser, aus Stahl, verkadmet

This European Standard was approved by CEN on 30 September 1999.

CEN members are bound to comply with the CEN/CENELEC Internal Regulations which stipulate the conditions for giving this European Standard the status of a national standard without any alteration. Up-to-date lists and bibliographical references concerning such national standards may be obtained on application to the Central Secretariat or to any CEN member.

This European Standard exists in three official versions (English, French, German). A version in any other language made by translation under the responsibility of a CEN member into its own language and notified to the Central Secretariat has the same status as the official versions.

iTeh STANDARD PREVIEW
(standards.iteh.ai)

CEN members are the national standards bodies of Austria, Belgium, Czech Republic, Denmark, Finland, France, Germany, Greece, Iceland, Ireland, Italy, Luxembourg, Netherlands, Norway, Portugal, Spain, Sweden, Switzerland and United Kingdom.

SIST EN 2913:2001
https://standards.iteh.ai/catalog/standards/sist/cf1fda8b-3852-49cb-bf16-bf753ae7c0ad/sist-en-2913-2001

EUROPEAN COMMITTEE FOR STANDARDIZATION
COMITÉ EUROPÉEN DE NORMALISATION
EUROPÄISCHES KOMITEE FÜR NORMUNG

Central Secretariat: rue de Stassart, 36 B-1050 Brussels

© 1999 CEN All rights of exploitation in any form and by any means reserved worldwide for CEN national Members.

Ref. No. EN 2913:1999 E

SIST EN 2913:2001

Foreword

This European Standard has been prepared by the European Association of Aerospace Manufacturers (AECMA).

After inquiries and votes carried out in accordance with the rules of this Association, this Standard has received the approval of the National Associations and the Official Services of the member countries of AECMA, prior to its presentation to CEN.

This European Standard shall be given the status of a national standard, either by publication of an identical text or by endorsement, at the latest by June 2000, and conflicting national standards shall be withdrawn at the latest by June 2000.

iTeh STANDARD PREVIEW
(standards.iteh.ai)

According to the CEN/CENELEC Internal Regulations, the national standards organizations of the following countries are bound to implement this European Standard: Austria, Belgium, Czech Republic, Denmark, Finland, France, Germany, Greece, Iceland, Ireland, Italy, Luxembourg, Netherlands, Norway, Portugal, Spain, Sweden, Switzerland and the United Kingdom.

SIST EN 2913:2001
https://standards.iteh.ai/catalog/standards/sist/cf1fda8b-3852-49cb-bf16-bf753ae7c0ad/sist-en-2913-2001

SIST EN 2913:2001

1 Scope

This standard specifies the characteristics of flat washers, large diameter, in steel, cadmium plated, for maximum operating temperature 235 °C.

2 Normative references

This European Standard incorporates by dated or undated reference provisions from other publications. These normative references are cited at the appropriate places in the text and the publications are listed hereafter. For dated references, subsequent amendments to or revisions of any of these publications apply to this European Standard only when incorporated in it by amendment or revision. For undated references the latest edition of the publication referred to applies.

EN 2000 Aerospace series - Quality assurance - EN aerospace products - Approval of the quality system of manufacturers

EN 2133 Aerospace series - Cadmium plating of steels with specified tensile strength ≤ 1 450 MPa, copper, copper alloys and nickel alloys

EN 2209 Steel FE-PL43S - 900 MPa ≤ R_m ≤ 1 100 MPa - Sheets, strips and plates 0,5 mm ≤ a ≤ 20 mm - Aerospace series [1)]

EN 2424 Aerospace series - Marking of aerospace products

EN 2438 Steel FE-PL62 - 900 MPa ≤ R_m ≤ 1 100 MPa - Bars D_e ≤ 40 mm - Aerospace series [1)]

iTeh STANDARD PREVIEW
(standards.iteh.ai)
SIST EN 2913:2001
https://standards.iteh.ai/catalog/standards/sist/cf1fda8b-3852-49cb-bf16-bf753ae7c0ad/sist-en-2913-2001

3 Required characteristics

3.1 Configuration - Dimensions - Masses

See figure 1 and table 1. Dimensions and tolerances are expressed in millimetres and apply after surface treatment.

3.2 Materials

EN 2209 or EN 2438

3.3 Surface treatment

EN 2133, 8 µm to 14 µm

Black colour option: code F (EN 2133, except for corrosion resistance requirement)

1) Published as AECMA Standard at the date of publication of this standard

SIST EN 2913:2001

6,3 [3,2] Values in micrometres apply prior to surface treatment.

Remove sharp edges 0,1 to 0,2.

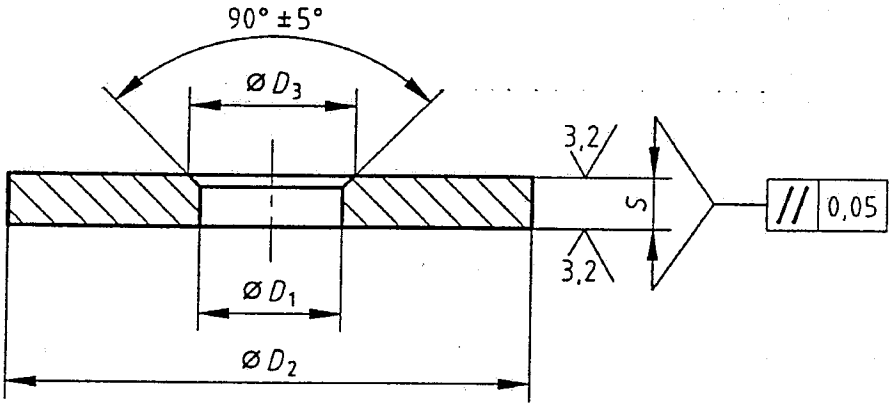

Figure 1

iTeh STANDARD PREVIEW
(standards.iteh.ai)

Table 1

SIST EN 2913:2001
https://standards.iteh.ai/catalog/standards/sist/cf1fda8b-3812-49c0-bf16-0f755ae7c6ad/sist-en-2913-2001

Diameter code	D_1 H13	D_2 h14	D_3 nom.	D_3 Tol.	S Thickness code	S ± 10 % [a]	Mass [b]
030	3,2	9	3,8	+0,1 / 0	06	0,6	0,26
					10	1	0,44
040	4,2	12	4,8		06	0,6	0,47
					10	1	0,78
050	5,2	15	6		10	1	1,22
					16	1,6	1,95
060	6,2	18	7,4	+0,2 / 0	12	1,2	2,11
					16	1,6	2,81
070	7,2	21	8,4		12	1,2	2,78
					16	1,6	3,71
080	8,2	24	9,4		16	1,6	5,02
					25	2,5	7,85
100	10,2	30	11,6		20	2	9,81
					25	2,5	12,3
120	12,2	36	13,8	+0,3 / 0	20	2	14,1
					25	2,5	17,7

[a] Includes also the flatness tolerance.
[b] Approximate values (kg/1 000 pieces), calculated on the basis of 7,85 kg/dm^3, given for information purposes only

SIST EN 2913:2001

4 Designation

EXAMPLE:

Description block	Identity block
WASHER	EN2913-08016F

Number of this standard

Diameter code (see table 1)

Thickness code (see table 1)

Black colour code (see 3.3)

NOTE: If necessary, the code I9005 shall be placed between the description block and the identity block.

5 Marking

EN 2424, style G

6 Quality assurance

EN 2000

iTeh STANDARD PREVIEW
(standards.iteh.ai)
SIST EN 2913:2001
https://standards.iteh.ai/catalog/standards/sist/cf1fda8b-3852-49cb-bf16-bf753ae7c0ad/sist-en-2913-2001