IEC 62150-2

Edition 2.0 2010-12

INTERNATIONAL STANDARD

NORME INTERNATIONALE

Fibre optic active components and devices – Test and measurement procedures – Part 2: ATM-PON transceivers

iTeh STANDARD PREVIEW
(standards.iteh.ai)
IEC 62150-2:2010
https://standards.iteh.ai/catalog/standards/sist/ba53b49-69a9-4550-81a2-60c1dd6c03dd/iec-62150-2-2010



Composants et dispositifs actifs à fibres optiques – Procédures d'essais et de mesures – Partie 2: Emetteurs-récepteurs ATM-PON

IEC 62150-2:2010

THIS PUBLICATION IS COPYRIGHT PROTECTED
Copyright © 2010 IEC, Geneva, Switzerland

All rights reserved. Unless otherwise specified, no part of this publication may be reproduced or utilized in any form or by any means, electronic or mechanical, including photocopying and microfilm, without permission in writing from either IEC or IEC's member National Committee in the country of the requester.
If you have any questions about IEC copyright or have an enquiry about obtaining additional rights to this publication, please contact the address below or your local IEC member National Committee for further information.

Droits de reproduction réservés. Sauf indication contraire, aucune partie de cette publication ne peut être reproduite ni utilisée sous quelque forme que ce soit et par aucun procédé, électronique ou mécanique, y compris la photocopie et les microfilms, sans l'accord écrit de la CEI ou du Comité national de la CEI du pays du demandeur.
Si vous avez des questions sur le copyright de la CEI ou si vous désirez obtenir des droits supplémentaires sur cette publication, utilisez les coordonnées ci-après ou contactez le Comité national de la CEI de votre pays de résidence.

IEC Central Office
3, rue de Varembé
CH-1211 Geneva 20
Switzerland
Email: inmail@iec.ch
Web: www.iec.ch

About the IEC

The International Electrotechnical Commission (IEC) is the leading global organization that prepares and publishes International Standards for all electrical, electronic and related technologies.

About IEC publications

The technical content of IEC publications is kept under constant review by the IEC. Please make sure that you have the latest edition, a corrigenda or an amendment might have been published.

- Catalogue of IEC publications: www.iec.ch/searchpub

The IEC on-line Catalogue enables you to search by a variety of criteria (reference number, text, technical committee,…). It also gives information on projects, withdrawn and replaced publications.

- IEC Just Published: www.iec.ch/online_news/justpub

Stay up to date on all new IEC publications. Just Published details twice a month all new publications released. Available on-line and also by email.

- Electropedia: www.electropedia.org

The world's leading online dictionary of electronic and electrical terms containing more than 20 000 terms and definitions in English and French, with equivalent terms in additional languages. Also known as the International Electrotechnical Vocabulary online.

- Customer Service Centre: www.iec.ch/webstore/custserv

If you wish to give us your feedback on this publication or need further assistance, please visit the Customer Service Centre FAQ or contact us:
Email: csc@iec.ch
Tel.: +41 22 919 02 11
Fax: +41 22 919 03 00

iTeh STANDARD PREVIEW
(standards.iteh.ai)
IEC 62150-2:2010
https://standards.iteh.ai/catalog/standards/sist/baf53b49-69a9-4550-8fa2-60c1dd6c03dd/iec-62150-2-2010

A propos de la CEI

La Commission Electrotechnique Internationale (CEI) est la première organisation mondiale qui élabore et publie des normes internationales pour tout ce qui a trait à l'électricité, à l'électronique et aux technologies apparentées.

A propos des publications CEI

Le contenu technique des publications de la CEI est constamment revu. Veuillez vous assurer que vous possédez l'édition la plus récente, un corrigendum ou amendement peut avoir été publié.

- Catalogue des publications de la CEI: www.iec.ch/searchpub/cur_fut-f.htm

Le Catalogue en-ligne de la CEI vous permet d'effectuer des recherches en utilisant différents critères (numéro de référence, texte, comité d'études,…). Il donne aussi des informations sur les projets et les publications retirées ou remplacées.

- Just Published CEI: www.iec.ch/online_news/justpub

Restez informé sur les nouvelles publications de la CEI. Just Published détaille deux fois par mois les nouvelles publications parues. Disponible en-ligne et aussi par email.

- Electropedia: www.electropedia.org

Le premier dictionnaire en ligne au monde de termes électroniques et électriques. Il contient plus de 20 000 termes et définitions en anglais et en français, ainsi que les termes équivalents dans les langues additionnelles. Egalement appelé Vocabulaire Electrotechnique International en ligne.

- Service Clients: www.iec.ch/webstore/custserv/custserv_entry-f.htm

Si vous désirez nous donner des commentaires sur cette publication ou si vous avez des questions, visitez le FAQ du Service clients ou contactez-nous:
Email: csc@iec.ch
Tél.: +41 22 919 02 11
Fax: +41 22 919 03 00

IEC 62150-2

Edition 2.0 2010-12

INTERNATIONAL STANDARD

NORME INTERNATIONALE

Fibre optic active components and devices – Test and measurement procedures – Part 2: ATM-PON transceivers

iTeh STANDARD PREVIEW
(standards.iteh.ai)
IEC 62150-2:2010
https://standards.iteh.ai/catalog/standards/sist/5a1f5949-69a7-4535-8a2-60c1dd6c03dd/iec-62150-2-2010

Composants et dispositifs actifs à fibres optiques – Procédures d'essais et de mesures – Partie 2: Emetteurs-récepteurs ATM-PON

INTERNATIONAL ELECTROTECHNICAL COMMISSION

COMMISSION ELECTROTECHNIQUE INTERNATIONALE

PRICE CODE
CODE PRIX T

ICS 33.180.20

ISBN 978-2-88912-296-7

® Registered trademark of the International Electrotechnical Commission
Marque déposée de la Commission Electrotechnique Internationale

CONTENTS

FOREWORD 4
INTRODUCTION 6
1 Scope 7
2 Normative references 7
3 Abbreviations and symbols 7
3.1 Abbreviations 7
3.2 Symbols 8
4 Standard ambient conditions 8
5 Apparatus 8
5.1 Power supply 8
5.2 Optical power meter 9
5.3 Variable optical attenuator 9
5.4 Pulse pattern generator 9
5.5 Optical splitter 9
5.6 Oscilloscope 9
5.7 Optical jumper cable 9
5.8 BER detector 9
5.9 Reference Tx and reference Rx 9
5.10 Calibrated optical spectrum analyzer 9
5.11 Low-pass filter 9
5.12 Optical-to-electrical (O/E) converter 10
6 Test sample 10
7 Testing and measuring procedures 10
7.1 Rx alarm function 10
7.1.1 Purpose 10
7.1.2 Testing and measuring configuration 10
7.1.3 Calibration of the optical splitter 10
7.1.4 Measuring procedures 11
7.1.5 Testing procedures 12
7.2 Tx shutdown function 12
7.2.1 Purpose 12
7.2.2 Testing configuration 12
7.2.3 Testing procedures 13
7.3 Mean launched power: P_{mean} 13
7.3.1 Purpose 13
7.3.2 Testing and measuring configuration 13
7.3.3 Measuring procedures 14
7.3.4 Testing procedures 15
7.4 Centroidal wavelength and spectral width 15
7.4.1 Purpose 15
7.4.2 Testing and measuring configuration 15
7.4.3 Measuring procedures 15
7.4.4 Testing procedures 16
7.5 Extinction ratio and mask test 16
7.5.1 Purpose 16
7.5.2 Testing and measuring configuration 16

iTeh STANDARD PREVIEW
(standards.iteh.ai)
IEC 62150-2:2010
https://standards.iteh.ai/catalog/standards/sist/bal53b49-69a9-4550-8fa2-0bc9dd6c03dd/iec-62150-2-2010

7.5.3 Measuring procedures 16
7.5.4 Testing procedures 17
7.6 Receiver sensitivity (S) and receiver overload (S_O) 17
7.6.1 Purpose 17
7.6.2 Testing and measuring configuration 17
7.6.3 Measuring procedures 18
7.6.4 Testing procedures 20
8 Test result 21
8.1 Required information 21
8.2 Available information 21
Bibliography 23

Figure 1 – Testing and measuring configuration for Rx alarm function 11
Figure 2 – Relation between receiver input power and alarm voltage 12
Figure 3 – Testing and measuring configuration for transmitter shutdown function 13
Figure 4 – Testing and measuring configuration for mean launched power 14
Figure 5 – Burst signal pattern 14
Figure 6 – Testing and measuring configuration for mean launched power 15
Figure 7 – Testing and measuring configuration for extinction ratio and mask test 16
Figure 8 – Testing and measuring configuration for receiver sensitivity and overload 18
Figure 9 – Burst signal patterns for measurement 19

Table 1 – Ambient conditions for carrying out measurements and tests 8

iTeh STANDARD PREVIEW
(standards.iteh.ai)
IEC 62150-2:2010
https://standards.iteh.ai/catalog/standards/sist/baf53b49-69a9-4550-8fa2-60c1dd6c03dd/iec-62150-2-2010

INTERNATIONAL ELECTROTECHNICAL COMMISSION

FIBRE OPTIC ACTIVE COMPONENTS AND DEVICES – TEST AND MEASUREMENT PROCEDURES –

Part 2: ATM-PON transceivers

FOREWORD

1) The International Electrotechnical Commission (IEC) is a worldwide organization for standardization comprising all national electrotechnical committees (IEC National Committees). The object of IEC is to promote international co-operation on all questions concerning standardization in the electrical and electronic fields. To this end and in addition to other activities, IEC publishes International Standards, Technical Specifications, Technical Reports, Publicly Available Specifications (PAS) and Guides (hereafter referred to as "IEC Publication(s)"). Their preparation is entrusted to technical committees; any IEC National Committee interested in the subject dealt with may participate in this preparatory work. International, governmental and non-governmental organizations liaising with the IEC also participate in this preparation. IEC collaborates closely with the International Organization for Standardization (ISO) in accordance with conditions determined by agreement between the two organizations.
2) The formal decisions or agreements of IEC on technical matters express, as nearly as possible, an international consensus of opinion on the relevant subjects since each technical committee has representation from all interested IEC National Committees.
3) IEC Publications have the form of recommendations for international use and are accepted by IEC National Committees in that sense. While all reasonable efforts are made to ensure that the technical content of IEC Publications is accurate, IEC cannot be held responsible for the way in which they are used or for any misinterpretation by any end user.
4) In order to promote international uniformity, IEC National Committees undertake to apply IEC Publications transparently to the maximum extent possible in their national and regional publications. Any divergence between any IEC Publication and the corresponding national or regional publication shall be clearly indicated in the latter.
5) IEC itself does not provide any attestation of conformity. Independent certification bodies provide conformity assessment services and, in some areas, access to IEC marks of conformity. IEC is not responsible for any services carried out by independent certification bodies.
6) All users should ensure that they have the latest edition of this publication.
7) No liability shall attach to IEC or its directors, employees, servants or agents including individual experts and members of its technical committees and IEC National Committees for any personal injury, property damage or other damage of any nature whatsoever, whether direct or indirect, or for costs (including legal fees) and expenses arising out of the publication, use of, or reliance upon, this IEC Publication or any other IEC Publications.
8) Attention is drawn to the Normative references cited in this publication. Use of the referenced publications is indispensable for the correct application of this publication.
9) Attention is drawn to the possibility that some of the elements of this IEC Publication may be the subject of patent rights. IEC shall not be held responsible for identifying any or all such patent rights.

iTeh STANDARD PREVIEW
(standards.iteh.ai)
IEC 62150-2:2010
https://standards.iteh.ai/catalog/standards/sist/baf53b49-69a9-4550-8fa2-6ab1d0be03dd/iec-62150-2-2010

International Standard IEC 62150-2 has been prepared by subcommittee 86C: Fibre optic systems and active devices, of IEC technical committee 86: Fibre optics.

This second edition cancels and replaces the first edition published in 2004. It constitutes a technical revision.

The significant technical change to the first edition is:

The power meter requires higher saturation power than $2 \times P_{mean}$ for P_{ave} measurement in Clause 7.3.3.

The text of this standard is based on the following documents:

FDIS	Report on voting
86C/974/FDIS	86C/977/RVD

Full information on the voting for the approval of this standard can be found in the report on voting indicated in the above table.

This publication has been drafted in accordance with the ISO/IEC Directives, Part 2.

A list of all the parts in the IEC 62150 series, under the general title *Fibre optic active components and devices – Test and measurement procedures*, can be found on the IEC website.

The committee has decided that the contents of this publication will remain unchanged until the stability date indicated on the IEC web site under "http://webstore.iec.ch" in the data related to the specific publication. At this date, the publication will be

- reconfirmed,
- withdrawn,
- replaced by a revised edition, or
- amended.

iTeh STANDARD PREVIEW
(standards.iteh.ai)
IEC 62150-2:2010
https://standards.iteh.ai/catalog/standards/sist/baf53b49-69a9-4550-8fa2-60c1dd6c03dd/iec-62150-2-2010

INTRODUCTION

This International Standard specifies testing and measuring procedures for optoelectronic properties of asynchronous-transfer-mode passive optical network (ATM-PON) transceivers. The package interface dimensions and optoelectronic performance of the transceivers are defined in IEC 62148-6 and IEC 62149-5, respectively.

iTeh STANDARD PREVIEW
(standards.iteh.ai)
IEC 62150-2:2010
https://standards.iteh.ai/catalog/standards/sist/baf53b49-69a9-4550-8fa2-60c1dd6c03dd/iec-62150-2-2010

FIBRE OPTIC ACTIVE COMPONENTS AND DEVICES – TEST AND MEASUREMENT PROCEDURES –

Part 2: ATM-PON transceivers

1 Scope

This part of IEC 62150 specifies testing and measuring procedures for fibre optic transceivers for asynchronous-transfer-mode passive optical network (ATM-PON) systems recommended by ITU-T G.983.1. These testing procedures correspond to methods of examining whether the transceivers satisfy the performance specifications defined in IEC 62149-5. On the other hand, the measuring procedures correspond to methods of precise measurement for such transceivers. The receiver sections of these transceivers can handle burst signals. Therefore, some procedures described in this standard correspond to the burst signal transmission.

2 Normative references

The following referenced documents are indispensable for the application of this document. For dated references, only the edition cited applies. For undated references, the latest edition of the referenced document (including any amendments) applies.

iTeh STANDARD PREVIEW
(standards.iteh.ai)

IEC 61280-1-3:1998, *Fibre optic communication subsystem basic test procedures – Part 1-3: Test procedures for general communication subsystems – Central wavelength and spectral width measurement*

IEC 62150-2:2010
https://standards.iteh.ai/catalog/standards/sist/baf53b49-69a9-4550-8fa2-60c1dd0c05d0/iec-62150-2-2010

IEC 61280-2-2:2008, *Fibre optic communication subsystem test procedures – Part 2-2: Digital systems – Optical eye pattern, waveform and extinction ratio measurement*

IEC 62149-5:2009, *Fibre optic active components and devices – Performance standards – Part 5: ATM-PON transceivers with LD driver and CDR ICs*

ITU-T G.983.1, *Broadband optical access systems based on Passive Optical Networks (PON)*

3 Abbreviations and symbols

For the purposes of this document, the following abbreviations and symbols are applicable.

3.1 Abbreviations

BER	bit error ratio characteristic
MLM-L	multi-longitudinal mode laser diode
NRZ	non-return to zero
O/E	optical/electrical
PON	passive optical network
PRBS	pseudo random binary sequence
Rx	receiver and /or receiver section of ATM-PON transceivers
SLM-LD	single longitudinal mode laser diode
Tx	transmitter and /or transmitter section of ATM-PON transceivers
WDM	wavelength division multiplexing

WWDM wide wavelength division multiplexing

3.2 Symbols

In order to specify the testing and measuring procedures, the following symbols are used.

A frame length
B burst signal length
$B1$ burst signal lengths for burst signal pattern 1
$B2$ burst signal lengths for burst signal pattern 2
n number of the burst signals within a frame
P_{ave} average launched power under burst mode operation
P_{mean} mean launched power specified in ITU-T G.983.1
P_{SH} launched optical power without input to transmitter
P_{TH} alarm threshold for received optical power
S_O receiver overload
V_{ALL} low-level alarm output voltage
V_{ALH} high-level alarm output voltage
V_{SDH} high-level shutdown input voltage
V_{SDL} low-level shutdown input voltage

iTeh STANDARD PREVIEW
(standards.iteh.ai)

4 Standard ambient conditions

IEC 62150-2:2010
https://standards.iteh.ai/catalog/standards/sist/baf53b49-69a9-4550-8b2-60c1dd6c03dd/iec-62150-2-2010

Standard ambient conditions need to be controlled within some range to ensure proper correlation of data obtained from measurements and tests conducted in various facilities. Test and measurement procedures shall be conducted under the following ambient conditions unless otherwise specified. In some cases, special ambient conditions may be needed. Such conditions can be specified in the performance standard.

Ambient conditions for carrying out measurements and tests are shown in Table 1:

Table 1 – Ambient conditions for carrying out measurements and tests

Temperature ° C	**Relative humidity** %	**Air pressure** KPa (mbar)
18 to 28	25 to 75	86 to 106 (860 mbar to 1 060 mbar)

Variations in ambient temperature and humidity shall be kept to a minimum during a series of measurements.

5 Apparatus

5.1 Power supply

In the d.c. power supply, the voltage fluctuation shall not exceed ±0,5 % or 10 mV, whichever is the larger. In the a.c. power supply, the higher harmonic content shall not exceed 5 %. If a commercial supply is used, the higher harmonic content shall not exceed 10 %.

In tests to measure a.c. output, the ripple content of the d.c. power supply, higher harmonic content of the a.c. power supply and a.c. impedance of the d.c. supply circuit through which a.c. current flows shall have small values so that they will not affect the measurements. The power supply shall be sufficient to protect against surges.

5.2 Optical power meter

The optical power meter used shall have a resolution of at least 0,1 dB and shall have been calibrated for the wavelength and dynamic range of operation for the equipment to be tested.

5.3 Variable optical attenuator

The attenuator shall be capable of attenuation in steps of less than or equal to 0,25 dB and should be able to provide total attenuation that is 5 dB to 10 dB more than the system gain. Care should be taken to avoid back reflection into the Tx.

5.4 Pulse pattern generator

The pulse pattern generator shall be capable of providing to the system PRBS signals and programmable word patterns that are consistent with the signal format (pulse shape, amplitude, etc.) required at the system input electrical interface of the Tx device.

5.5 Optical splitter

Optical splitter (coupler) should have one input port and two output ports, equipped with appropriate connectors. The splitting ratio for the output ports should be approximately 50 % (unless otherwise specified). Since the ATM-PON transceiver adopts the WWDM (1,55/1,3 μm WDM), an optical splitter whose splitting ratio has little wavelength dependence should be used.

iTeh STANDARD PREVIEW
(standards.iteh.ai)

5.6 Oscilloscope

The oscilloscope that displays the optical and/or electrical eye patterns should have a bandwidth well in excess of the bandwidth of the low-pass filter, so that the oscilloscope is not the bandwidth-limiting component of the measurement system. The oscilloscope shall be triggered either from a local clock signal that is synchronous with the optical and/or electrical eye patterns, or from a synchronization signal derived from the optical waveform itself.

5.7 Optical jumper cable

Single-mode fibre jumper cables with the appropriate connectors shall be used.

5.8 BER detector

The BER detector evaluates the BER performance of the system with various signal formats (programmable word pattern, PRBS, etc.).

5.9 Reference Tx and reference Rx

A Tx and/or an Rx shall be combined with the tested Tx and/or tested Rx in the measurement configuration. The performance of the reference Tx and/or Rx shall be high enough for testing and measuring of the optoelectronic properties of ATM-PON transceivers. Especially important is that the reference Tx have a bandwidth that is much higher than 155,52 Mbit/s and an extinction ratio of more than 10 dB.

5.10 Calibrated optical spectrum analyzer

The test equipment shall utilize a dispersive spectro-photometric method to resolve the optical spectral distribution. The resolution for MLM-LDs shall be better than 0,2 nm, and 0,1 nm for SLM-LDs, with a 50 nm range for both types of LDs.

5.11 Low-pass filter

To ensure repeatability and accuracy, a low-pass filter that has the following characteristics shall be located in the signal path before the oscilloscope.

Low-pass filter characteristics:

characteristic impedance:	50 Ω nominal
–3 dB bandwidth:	0,75/T Hz, where T is the bit interval of the data signal
filter type:	4th-order Bessel-Thomson

Further filter specifications are described in 3.1.3 of IEC 61280-2-2.

5.12 Optical-to-electrical (O/E) converter

The O/E converter shall be typically a high-speed photodiode, followed by electrical amplifiers and shall be able to reproduce the optical waveform with sufficient fidelity to ensure a meaningful measurement. Further specifications are described in 3.1.1 of IEC 61280-2-2.

6 Test sample

The test sample shall be an ATM-PON transceiver having the performance defined in IEC 62149-5. The tested transceiver shall be installed in each testing and/or measuring configuration, as shown in the figures in each subclause.

7 Testing and measuring procedures

7.1 Rx alarm function

iTeh STANDARD PREVIEW
(standards.iteh.ai)

7.1.1 Purpose

The alarm output voltage shall be changed from high to low when the incident optical signal power is below the threshold value (P_{TH}: –30 dBm for class B transceiver, –33 dBm for class C transceiver). This subclause defines the testing and measuring procedures for the Rx alarm function of the ATM-PON transceiver.

IEC 62150-2:2010
https://standards.iteh.ai/catalog/standards/sist/5bcf53b4-6b0d-4550-8f67-60ab1d5c03dd/iec-62150-2-2010

7.1.2 Testing and measuring configuration

Unless otherwise specified, a tested ATM-PON transceiver and a reference Tx shall be installed in the measuring and testing configuration, as shown in Figure 1.

7.1.3 Calibration of the optical splitter

The calibration of the optical splitter shall be carried out as follows:

a) Before measurement and testing, the optical splitter shall be calibrated as stated below.

b) Operate the reference Tx under normal operating conditions and apply the 155,52 Mbit/s-NRZ-PRBS 2^{23}–1 signal (mark ratio 50 %) to the signal input terminal.

c) Connect the optical output port of the reference Tx with the input port of the optical splitter through the jumper cable and variable optical attenuator.

d) Connect output port A of the optical splitter with the input port of the optical power meter through the jumper cable.

e) Adjust the variable optical attenuator so that the output optical power of port A is around P_{TH}. Record its value (P_A).

f) Connect output port B of the optical splitter with the input port of the optical power meter through the jumper cable and record the optical power of port B (P_B).

g) Connect output port A of the optical splitter with the input port of optical power meter through the jumper cable again. Connect output port B of the optical splitter with the tested ATM-PON transceiver, as shown in Figure 1.

h) Calculate the ratio of P_B/P_A and use it as a calibration factor between the incident optical power (P_B) and optical power meter indication (P_A).

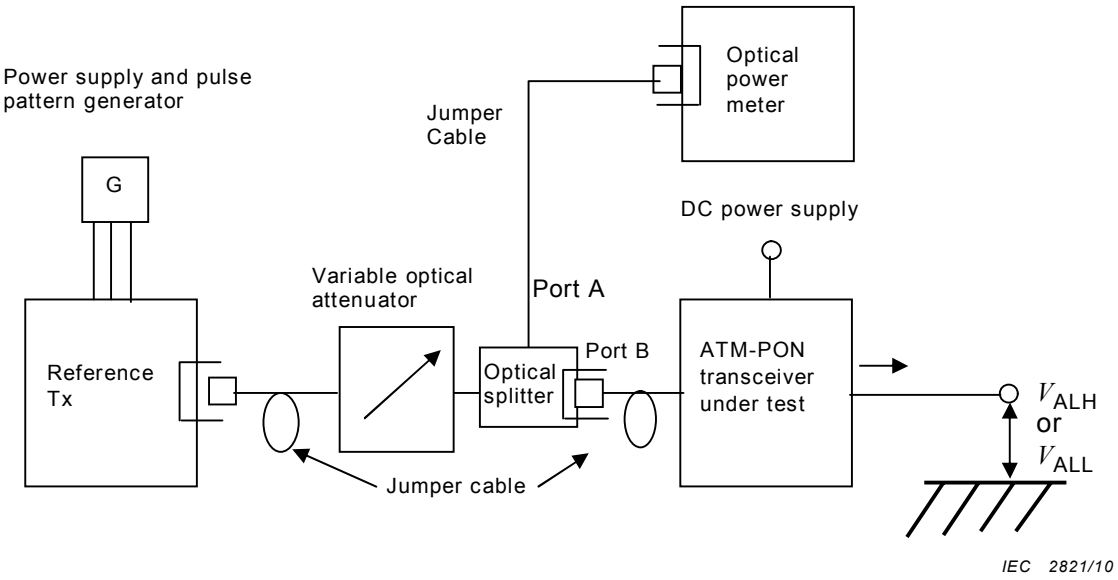

Figure 1 – Testing and measuring configuration for Rx alarm function

iTeh STANDARD PREVIEW
(standards.iteh.ai)

7.1.4 Measuring procedures

The measuring procedures shall be carried out as follows:

IEC 62150-2:2010
https://standards.iteh.ai/catalog/standards/sist/baf53b49-69a0-4550-8fe2-60c1dd6c03dd/iec-62150-2-2010

a) Drive the tested ATM-PON transceiver under normal operating conditions and confirm that the alarm output voltage is in the low-level (V_{ALL}) range specified in IEC 62149-5.

b) The tested ATM-PON transceiver and a reference Tx shall be installed in the configuration shown in Figure 1.

c) Apply the 155,52 Mbit/s-NRZ-PRBS 2^{23}–1 signal (mark ratio 50 %) to the signal input terminal.

d) Adjust the variable optical attenuator so that P_B is much lower than P_{TH} and record the P_B value as a P_{IL}.

e) Adjust the variable optical attenuator so that P_B exceeds P_{TH} and record the alarm output voltage.

f) Confirm that the alarm output voltage is changed from low-level (V_{ALL}) to high-level (V_{ALH}) specified in IEC 62149-5 when P_B is around P_{TH}.

g) Adjust the variable optical attenuator so that P_B reaches the overload value (S_O) and record the alarm output voltage and confirm that the alarm output voltage is in the high-level (V_{ALH}) range specified in IEC 62149-5.

h) Adjust the variable optical attenuator so that P_B reaches P_{IL} with recording the alarm output voltage.

i) Confirm that the alarm output voltage is changed from high-level (V_{ALH}) to low-level (V_{ALL}) when P_B is below P_{IL}.

As a result of the above procedures, a relation between P_B and the alarm output voltage is obtained as a hysteresis curve as shown in Figure 2. This hysteresis curve is the measurement data of receiver alarm function.

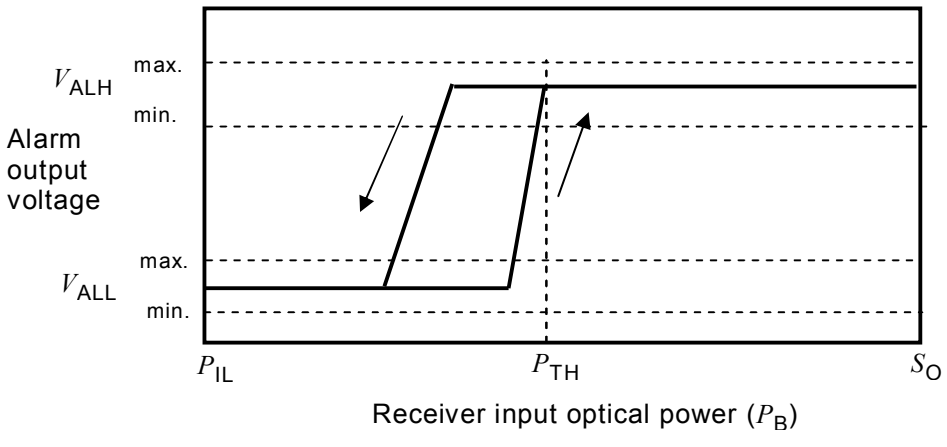

Figure 2 – Relation between receiver input power and alarm voltage

7.1.5 Testing procedures

The testing procedures shall be carried out as follows:

iTeh STANDARD PREVIEW
(standards.iteh.ai)

a) Operate the tested ATM-PON transceiver under normal operating conditions and confirm that the alarm output voltage is in the low-level (V_{ALL}) range.

b) The tested ATM-PON transceiver and a reference Tx shall be installed in the configuration shown in Figure 1.

IEC 62150-2:2010
https://standards.iteh.ai/catalog/standards/sist/baf53b49-69a9-4550-8fd2-60c1dd6c03dd/iec-62150-2-2010

c) Apply the 155,52 Mbit/s-NRZ-PRBS $2^{23}–1$ signal (mark ratio 50 %) to the signal input terminal.

d) Adjust the variable optical attenuator so that the P_B coincides with P_{TH} and confirm that the alarm output voltage is in the high-level (V_{ALH}) range. Record the V_{ALH} value.

e) Adjust the valuable optical attenuator so that the P_B is much lower than P_{TH} and confirm that the alarm output voltage is in the low-level (V_{ALL}) range. Record the V_{ALL} value.

7.2 Tx shutdown function

7.2.1 Purpose

The output optical power shall be decreased to be less than launched optical power without input signal or P_{SH} (–40 dBm for class B transceivers, –43 dBm for class C transceivers) when the applied high-level voltage of the shutdown terminal is changed to low-level. This clause defines the testing procedures for the Tx shutdown function of the ATM-PON transceiver.

7.2.2 Testing configuration

Unless otherwise specified, a tested transceiver shall be installed in the testing configuration, as shown in Figure 3.

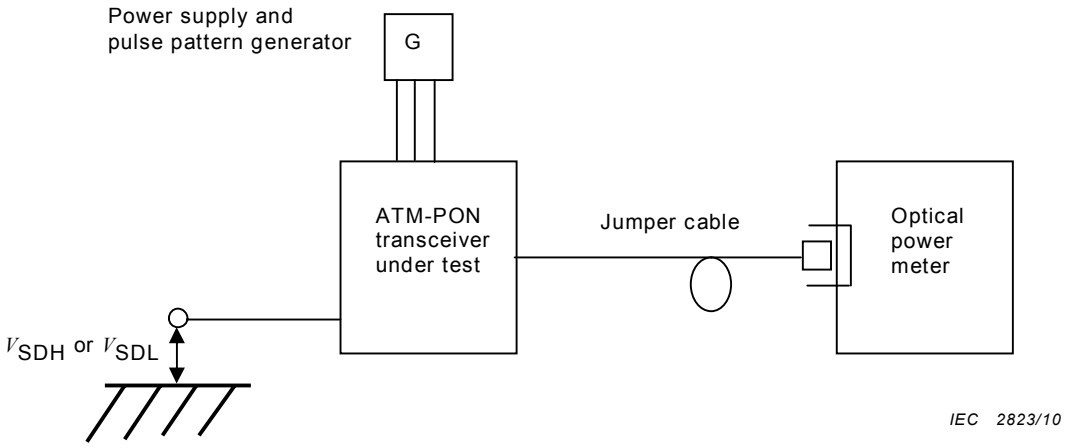

Figure 3 – Testing and measuring configuration for transmitter shutdown function

7.2.3 Testing procedures

The testing procedures shall be carried out as follows:

a) Operate the tested ATM-PON transceiver under normal operating conditions and apply the high-level voltage (from 2,0 V to V_{cc} + 0,3 V) to the shutdown terminal of the tested transceiver.

b) Apply the 155,52 Mbit/s-NRZ-PRBS 2^{23}–1 signal (mark ratio 50 %) to the signal input terminal and confirm that the average output power from the tested transceiver is within the specified range for P_{mean} (mean launched power) (from –4 dBm to +2 dBm for class B modules, from –2 dBm to +4 dBm for class C modules, see IEC 62149-5).

c) Change the applied high-level voltage to low-level voltage (from –0,3 V to 0,8 V) and confirm that the average output power from the tested transceiver is less than P_{SH}.

d) Change the applied low-level voltage to high-level voltage and confirm that the average output power from the tested transceiver is within the specified range for P_{mean} (from –4 dBm to +2 dBm for class B modules, from –2 dBm to +4 dBm for class C modules).

iTeh STANDARD PREVIEW
(standards.iteh.ai)
IEC 62150-2:2010
https://standards.iteh.ai/catalog/standards/sist/8a53b49-09a9-4530-8fa2-60c1dd6c05dd/iec-62150-2-2010

7.3 Mean launched power: P_{mean}

7.3.1 Purpose

This subclause defines the testing and measuring procedures for the mean launched power of the ATM-PON transceiver.

7.3.2 Testing and measuring configuration

Unless otherwise specified, a tested transceiver shall be installed in the measuring and testing configuration as shown in Figure 4.