# IEC/PAS 61169-44

Edition 1.0 2010-04

# PUBLICLY AVAILABLE SPECIFICATION

## PRE-STANDARD

colour inside

Withdrawn

**Radio-frequency connectors –**
**Part 44: Sectional specification for series SMP push-on radio-frequency coaxial connectors**

iTeh STANDARD PREVIEW
(standards.iteh.ai)
IEC PAS 61169-44:2010
https://standards.iteh.ai/catalog/standards/sist/84bc20e4-25d3-401b-98ac-a3c6dcb6ae23/iec-pas-61169-44-2010

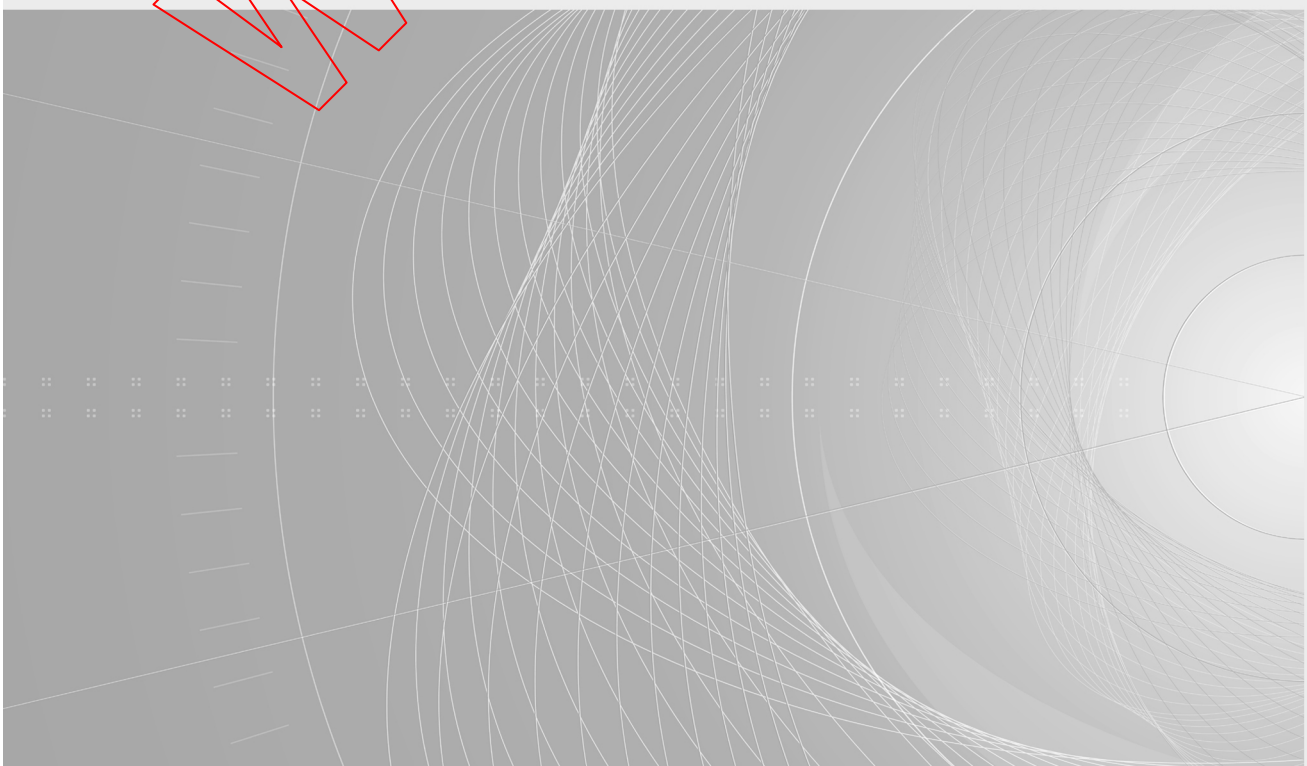

IEC/PAS 61169-44:2010(E)



## THIS PUBLICATION IS COPYRIGHT PROTECTED

**Copyright © 2010 IEC, Geneva, Switzerland**

All rights reserved. Unless otherwise specified, no part of this publication may be reproduced or utilized in any form or by any means, electronic or mechanical, including photocopying and microfilm, without permission in writing from either IEC or IEC's member National Committee in the country of the requester.

If you have any questions about IEC copyright or have an enquiry about obtaining additional rights to this publication, please contact the address below or your local IEC member National Committee for further information.



IEC Central Office
3, rue de Varembé
CH-1211 Geneva 20
Switzerland
Email: inmail@iec.ch
Web: www.iec.ch


### About the IEC

The International Electrotechnical Commission (IEC) is the leading global organization that prepares and publishes International Standards for all electrical, electronic and related technologies.

### About IEC publications

The technical content of IEC publications is kept under constant review by the IEC. Please make sure that you have the latest edition, a corrigenda or an amendment might have been published.

- Catalogue of IEC publications: www.iec.ch/searchpub

The IEC on-line Catalogue enables you to search by a variety of criteria (reference number, text, technical committee,…). It also gives information on projects, withdrawn and replaced publications.

- IEC Just Published: www.iec.ch/online_news/justpub

Stay up to date on all new IEC publications. Just Published details twice a month all new publications released. Available on-line and also by email.

- Electropedia: www.electropedia.org

The world's leading online dictionary of electronic and electrical terms containing more than 20 000 terms and definitions in English and French, with equivalent terms in additional languages. Also known as the International Electrotechnical Vocabulary online.

- Customer Service Centre: www.iec.ch/webstore/custserv

If you wish to give us your feedback on this publication or need further assistance, please visit the Customer Service Centre FAQ or contact us:

Email: csc@iec.ch
Tel.: +41 22 919 02 11
Fax: +41 22 919 03 00


Withdrawn
iTeh STANDARD PREVIEW
(standards.iteh.ai)
IEC PAS 61699-44:2010
https://standards.iteh.ai/catalog/standards/iec/61699-44-2010

# IEC/PAS 61169-44

Edition 1.0 2010-04

# PUBLICLY AVAILABLE SPECIFICATION

## PRE-STANDARD




Withdrawn
iTeh STANDARD PREVIEW
(standards.iteh.ai)
IEC PAS 61169-44:2010
https://standards.iteh.ai/catalog/standards/sist/8fbe20e4-25d3-401b-98ac-a3c6dcb6ae23/iec-pas-61169-44-2010

**Radio-frequency connectors –**
**Part 44: Sectional specification for series SMP push-on radio-frequency coaxial connectors**

INTERNATIONAL
ELECTROTECHNICAL
COMMISSION

PRICE CODE V

ICS 33.120.30

ISBN 978-2-88910-804-6

® Registered trademark of the International Electrotechnical Commission

# CONTENTS

FOREWORD ..... 4
1 Scope ..... 6
2 Normative references ..... 6
3 Mating face and gauge information ..... 6
3.1 Dimensions – General connectors – Grade 1 ..... 7
3.1.1 Connector with pin-centre contact ..... 7
3.1.2 Connector with socket-centre contact ..... 10
3.2 Gauges ..... 11
3.2.1 Gauge pin for socket-centre contact ..... 11
3.2.2 Gauge for outer contact of connector with socket-centre contact ..... 12
3.3 Dimensions- standard test connectors – Grade 0 ..... 15
3.3.1 Connector with pin-centre contact ..... 15
3.3.2 Connector with socket-centre contact ..... 17
4 Quality assessment procedure ..... 18
4.1 General ..... 18
4.2 Rating and characteristics (see Clause 6 of IEC 61169-1) ..... 18
4.3 Test schedule and inspection requirements ..... 22
4.3.1 Acceptance tests ..... 22
4.3.2 Periodic tests ..... 23
4.4 Procedures ..... 24
4.4.1 Quality conformance inspection ..... 24
4.4.2 Qualification approval and its maintenance ..... 24
5 Instructions for preparation of detail specifications ..... 25
5.1 General ..... 25
5.2 Identification of the detail specification ..... 25
5.3 Identification of the component ..... 25
5.4 Performance ..... 26
5.5 Marking, ordering information and related matters ..... 26
5.6 Selection of tests, test conditions and severities ..... 26
5.7 Blank detail specification pro forma for series RBMA connectors ..... 27

Figure 1 – Connector with pin-centre contact limited detent and full detent (for dimensions and notes, see Table 1) ..... 7
Figure 2 – Connector with pin-centre contact – Smooth bore (for dimensions and notes, see Table 2) ..... 8
Figure 3 – Connector with pin- centre contact – Catchers mit (for dimensions and notes, see Table 3) ..... 9
Figure 4 – Connector with socket-centre contact (for dimensions and notes, see Table 4) ..... 10
Figure 5 – Gauge pin for socket-centre contact (for dimensions and notes, see Table 5) ..... 11
Figure 6 – Gauge with limited detent for outer contact of connector with socket-outer contact (for dimensions and notes, see Table 6) ..... 12
Figure 7 – Gauge pin – Full detent for outer contact of connector with socket-centre (for dimensions and notes, see Table 7) ..... 13

Withdrawn
iTeh STANDARD PREVIEW
(standards.iteh.ai)
IEC PAS 61169-44:2010
https://standards.iteh.ai/catalog/standards/sist/e5a5dbe0-e4-25d3-401b-98ac-a3c6dcb6ae23/iec-pas-61169-44-2010

Figure 8 – Gauge pin – Smooth bore for outer contact of connector with socket-centre (for dimensions and notes, see Table 8) ..... 14
Figure 9 – Connector with pin-centre contact – Limited detent and full detent (for dimensions and notes, see Table 9) ..... 15
Figure 10 – Connector with pin – centre contact – Smooth bore (for dimensions and notes, see Table 10) ..... 16
Figure 11 – Connector with socket-centre contact (for dimensions and notes, see Table 11) ..... 17

Table 1 – Dimensions of connector with pin-centre contact limited detent and full detent ..... 7
Table 2 – Dimensions of connector with pin-centre contact – Smooth bore ..... 8
Table 3 – Dimensions of connector with pin-centre contact – Catchers mit ..... 9
Table 4 – Dimensions of connector with socket-centre contact ..... 10
Table 5 – Dimensions of gauge pin for socket-centre contact ..... 11
Table 6 – Gauge with limited detent for outer contact of connector with socket-outer contact ..... 12
Table 7 – Gauge pin – Full detent for outer contact of connector with socket-centre ..... 13
Table 8 – Gauge pin – Smooth bore for outer contact of connector with socket-centre ..... 14
Table 9 – Dimensions of connector with pin-centre contact – Limited detent and full detent ..... 16
Table 10 – Dimensions of connector with pin-centre contact – Smooth bore ..... 17
Table 11 – Dimensions of connector with socket-centre contact ..... 18
Table 12 – Rating and characteristics ..... 19
Table 13 – Acceptance tests ..... 22
Table 14 – Periodic tests ..... 23

Withdrawn
iTeh STANDARD PREVIEW
(standards.iteh.ai)
IEC PAS 61169-44:2010
https://standards.iteh.ai/catalog/standards/sist/8dbc20e4-25d3-401b-98ac-a3c6dcb6ae23/iec-pas-61169-44-2010

INTERNATIONAL ELECTROTECHNICAL COMMISSION

# RADIO-FREQUENCY CONNECTORS –

## Part 44: Sectional specification for series SMP push-on radio-frequency coaxial connectors

## FOREWORD

1) The International Electrotechnical Commission (IEC) is a worldwide organization for standardization comprising all national electrotechnical committees (IEC National Committees). The object of IEC is to promote international co-operation on all questions concerning standardization in the electrical and electronic fields. To this end and in addition to other activities, IEC publishes International Standards, Technical Specifications, Technical Reports, Publicly Available Specifications (PAS) and Guides (hereafter referred to as "IEC Publication(s)"). Their preparation is entrusted to technical committees; any IEC National Committee interested in the subject dealt with may participate in this preparatory work. International, governmental and non-governmental organizations liaising with the IEC also participate in this preparation. IEC collaborates closely with the International Organization for Standardization (ISO) in accordance with conditions determined by agreement between the two organizations.
2) The formal decisions or agreements of IEC on technical matters express, as nearly as possible, an international consensus of opinion on the relevant subjects since each technical committee has representation from all interested IEC National Committees.
3) IEC Publications have the form of recommendations for international use and are accepted by IEC National Committees in that sense. While all reasonable efforts are made to ensure that the technical content of IEC Publications is accurate, IEC cannot be held responsible for the way in which they are used or for any misinterpretation by any end user.
4) In order to promote international uniformity, IEC National Committees undertake to apply IEC Publications transparently to the maximum extent possible in their national and regional publications. Any divergence between any IEC Publication and the corresponding national or regional publication shall be clearly indicated in the latter.
5) IEC itself does not provide any attestation of conformity. Independent certification bodies provide conformity assessment services and, in some areas, access to IEC marks of conformity. IEC is not responsible for any services carried out by independent certification bodies.
6) All users should ensure that they have the latest edition of this publication.
7) No liability shall attach to IEC or its directors, employees, servants or agents including individual experts and members of its technical committees and IEC National Committees for any personal injury, property damage or other damage of any nature whatsoever, whether direct or indirect, or for costs (including legal fees) and expenses arising out of the publication, use of, or reliance upon, this IEC Publication or any other IEC Publications.
8) Attention is drawn to the Normative references cited in this publication. Use of the referenced publications is indispensable for the correct application of this publication.
9) Attention is drawn to the possibility that some of the elements of this IEC Publication may be the subject of patent rights. IEC shall not be held responsible for identifying any or all such patent rights.

A PAS is a technical specification not fulfilling the requirements for a standard, but made available to the public.

IEC-PAS 61169-44 has been processed by subcommittee 46F: RF and microwave passive components, of IEC technical committee 46: Cables, wires, waveguides, R.F. connectors, R.F. and microwave passive components and accessories.

| The text of this PAS is based on the following document: | This PAS was approved for publication by the P-members of the committee concerned as indicated in the following document |
|---|---|
| **Draft PAS** | **Report on voting** |
| 46F/153/PAS | 46F/159/RVD |

Following publication of this PAS, which is a pre-standard publication, the technical committee or subcommittee concerned may transform it into an International Standard.

Withdrawn
IECNORM.COM : Click to view the full PDF of IEC PAS 61169-44:2010
(standards.iteh.ai)

This PAS shall remain valid for an initial maximum period of 3 years starting from the publication date. The validity may be extended for a single 3-year period, following which it shall be revised to become another type of normative document, or shall be withdrawn.

This publication has been drafted in accordance with the ISO/IEC Directives, Part 2.

A list of all parts of the IEC 61169 series, under the general title: *Radio-frequency connectors*, can be found on the IEC website.

**IMPORTANT – The 'colour inside' logo on the cover page of this publication indicates that it contains colours which are considered to be useful for the correct understanding of its contents. Users should therefore print this document using a colour printer.**

Withdrawn
iTeh STANDARD PREVIEW
(standards.iteh.ai)
IEC PAS 61169-44:2010
https://standards.iteh.ai/catalog/standards/sist/8dbe20e4-25d3-401b-98ac-a3c6dcb6ae23/iec-pas-61169-44-2010

# RADIO-FREQUENCY CONNECTORS –

# Part 44: Sectional specification for series SMP push-on radio-frequency coaxial connectors

## 1 Scope

Series SMP push-on connectors have a characteristic impedance of 50 Ω and are used with RF cables or micro-strips in microwave, telecommunication, wireless and other fields. The connectors are usable up to a frequency of 40 GHz.

This PAS provides information and rules for preparation of detail specification of SMP series push-on RF coaxial connectors together with the pro forma blank detail specification.

It also prescribes mating face dimensions for general purpose connectors – grade 1, dimensional details of standard test connectors-grade 0, gauging information and tests selected from IEC 61169-1 applicable to all detail specifications relating to series SMP RF connectors.

This PAS indicates the recommended performance characteristics to be considered when writing a detail specification and it covers test schedules and inspection requirements for assessment levels M and H.

iTeh STANDARD PREVIEW
(standards.iteh.ai)
IEC PAS 61169-44:2010

## 2 Normative references

The following referenced documents are indispensable for the application of this document. For dated references, only the edition cited applies. For undated references, the latest edition of the referenced document (including any amendments) applies.

IEC 61169-1:1992, *Radio-frequency connectors – Part 1: Generic specification – General requirements and measuring methods*[1)]
Amendment 1 (1996)
Amendment 2 (1997)

## 3 Mating face and gauge information

Metric dimensions are original dimensions.

All undimensioned pictorial configurations are for reference purpose only.

.

Withdrawn

1) There exists a consolidated edition 1.2 (1998) that comprises IEC 61169-1:1992, its Amendment 1:1996 and its Amendment 2:1997.

### 3.1 Dimensions – General connectors – Grade 1

#### 3.1.1 Connector with pin-centre contact

##### 3.1.1.1 Connector with pin-centre contact limited detent and full detent

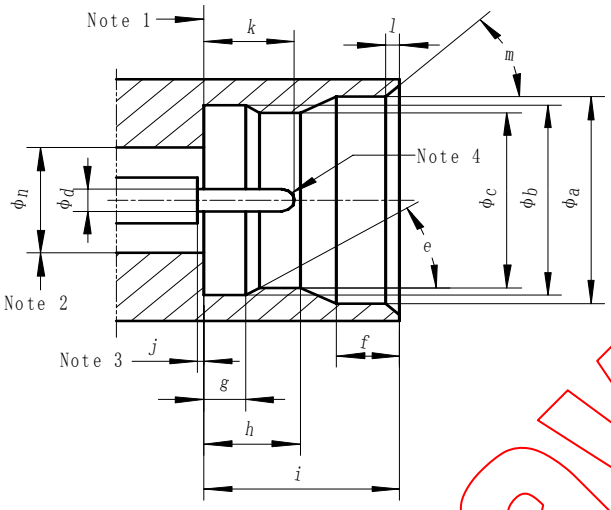


**Figure 1 – Connector with pin-centre contact limited detent and full detent (for dimensions and notes, see Table 1)**

**Table 1 – Dimensions of connector with pin-centre contact limited detent and full detent**

| Ref. | mm | | Notes |
|---|---|---|---|
| | Min. | Max. | |
| *a* | 3,53 | 3,68 | |
| *b* | 3,13 | 3,23 | |
| *c* | 3,00 | 3,10 | Limited detent |
| | 2,90 | 3,00 | Full detent |
| *d* | 0,38 | 0,41 | |
| *e* | 30° REF, | | Angle |
| *f* | 0,84 | 0,94 | |
| *g* | 0,52 | 0,60 | |
| *h* | 1,37 | 1,52 | Limited detent |
| | 1,30 | 1,45 | Full detent |
| *i* | 2,74 | 2,84 | |
| *j* | 0,00 | — | |
| *k* | 1,14 | 1,40 | |
| *l* | 0,08 | 0,20 | |
| *m* | 40° | 50° | Angle |
| *n* | — | — | |

NOTE 1 Mechanical and electrical reference plane.

NOTE 2 The diameter chosen must meet the nominal impedance of 50 Ω and electrical and mechanical requirements.

NOTE 3 To meet electrical requirement.

NOTE 4 Spherical or chamfered.

Withdrawn

### 3.1.1.2 Connector with pin-centre contact – Smooth bore

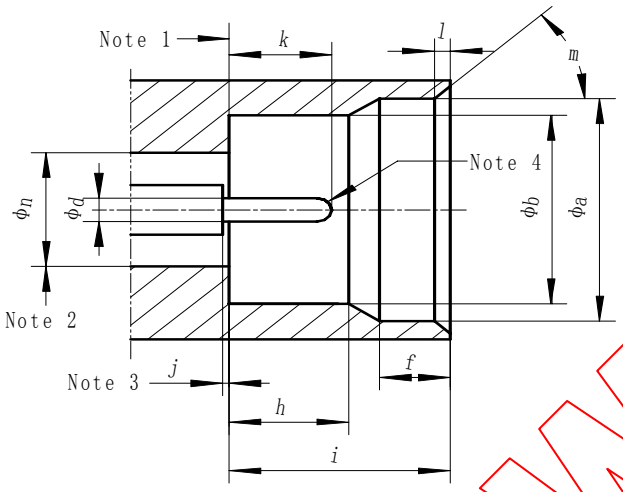


**Figure 2 – Connector with pin-centre contact – Smooth bore (for dimensions and notes, see Table 2)**

iTeh STANDARD PREVIEW
(standards.iteh.ai)
IEC PAS 61169-44:2010
https://standards.iteh.ai/catalog/standards/sist/84bd20e4-45d3-401b-98ac-a3c6dcb6ae23/iec-pas-61169-44-2010
Withdrawn

**Table 2 – Dimensions of connector with pin-centre contact – Smooth bore**

| Ref. | mm | | Notes |
|---|---|---|---|
| | Min. | Max. | |
| *a* | 3,53 | 3,68 | |
| *b* | 3,13 | 3,23 | |
| *d* | 0,38 | 0,41 | |
| *f* | 0,84 | 0,94 | |
| *h* | 1,50 | 1,65 | |
| *i* | 2,74 | 2,84 | |
| *j* | 0,00 | — | |
| *k* | 1,14 | 1,40 | |
| *l* | 0,08 | 0,20 | |
| *m* | 40° | 50° | Angle |
| *n* | — | — | |

NOTE 1 Mechanical and electrical reference plane.

NOTE 2 The diameter chosen must meet the nominal impedance of 50 Ω and electrical and mechanical requirements.

NOTE 3 To meet electrical requirement.

NOTE 4 Spherical or chamfered.

### 3.1.1.3 Connector with pin-centre contact – Catchers mit

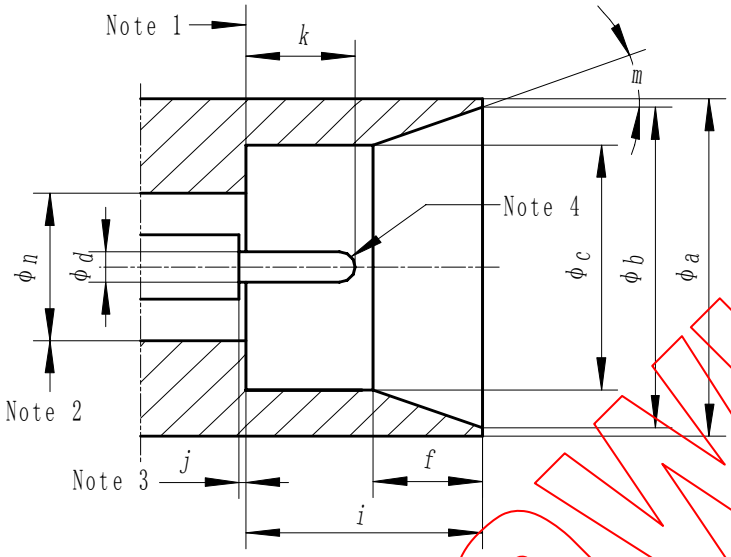


**Figure 3 – Connector with pin- centre contact – Catchers mit (for dimensions and notes, see Table 3)**

**Table 3 – Dimensions of connector with pin-centre contact – Catchers mit**

| Ref. | mm | | Notes |
|---|---|---|---|
| | Min. | Max. | |
| *a* | 5,94 | — | |
| *b* | — | 5,59 | |
| *c* | 3,13 | 3,23 | |
| *d* | 0,38 | 0,41 | |
| *f* | 1,09 | 1,19 | |
| *i* | 2,74 | 2,84 | |
| *j* | 0,00 | — | |
| *k* | 1,14 | 1,40 | |
| *m* | 45 ° REF. | | Angle |
| *n* | — | — | |

NOTE 1 Mechanical and electrical reference plane.

NOTE 2 The diameter chosen must meet the nominal impedance of 50 Ω and electrical and mechanical requirements.

NOTE 3 To meet electrical requirement.

NOTE 3 Spherical or chamfered.

Withdrawn
iTeh STANDARD PREVIEW
(standards.iteh.ai)

### 3.1.2 Connector with socket-centre contact

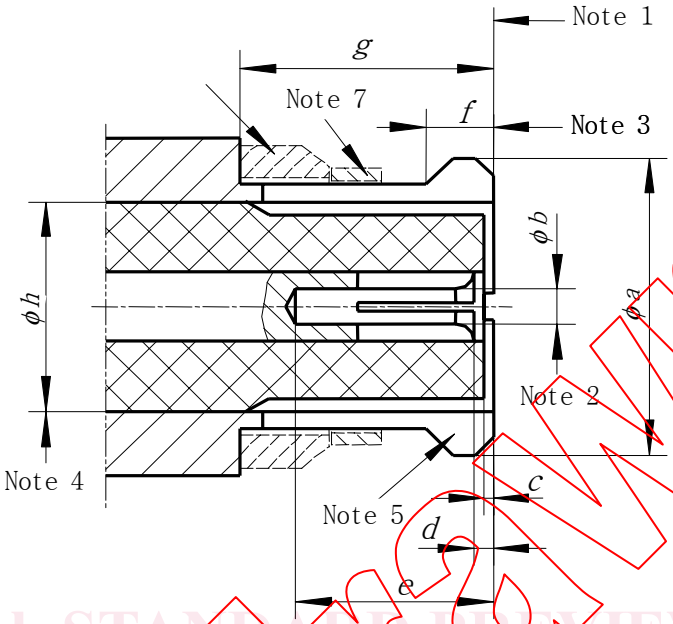


**Figure 4 – Connector with socket-centre contact**
**(for dimensions and notes, see Table 4)**

**Table 4 – Dimensions of connector with socket-centre contact**

| Ref. | p | | Notes |
|---|---|---|---|
| | Min. | Max. | |
| *a* | — | 3,43 | |
| *b* | — | — | |
| *c* | 0,00 | 0,20 | |
| *d* | 0,00 | 0,20 | |
| *e* | 1,78 | — | |
| *f* | 0,46 | 0,64 | uncabled |
| | 0,64 | 0,89 | cabled |
| *g* | 2,84 | — | |
| *h* | — | — | |

NOTE 1 Mechanical and electrical reference plane.

NOTE 2 The diameter should comply with required VSWR, mating feature and durability when mated with a Φ0,38～Φ0,41 diameter.

NOTE 3 The form and dimensions of outer conductor to meet mechanical and electrical requirements.

NOTE 4 Diameter is chosen upon the assumption that the PTFE dielectric has a dielectric constant of 2,02 to give an impedance of 50 Ω.

NOTE 5 The number and dimension of slots must meet mechanical and electrical requirements.

NOTE 6 Anti-rock ring is optional.

NOTE 7 EMI shield is optional.

iTeh STANDARD PREVIEW
(standards.iteh.ai)
IEC PAS 61169-44:2010
Withdrawn