IEC 61169-44

Edition 1.0 2012-12

INTERNATIONAL STANDARD

colour inside

Radio-frequency connectors – Part 44: Sectional specification for series SMP push-on radio-frequency coaxial connectors

iTeh Standards
(https://standards.iteh.ai)
Document Preview
IEC 61169-44:2012
https://standards.iteh.ai/catalog/standards/iec/57adc6b5-66ba-488f-b44d-8ff7eb14a69b/iec-61169-44-2012



IEC 61169-44:2012(E)

THIS PUBLICATION IS COPYRIGHT PROTECTED
Copyright © 2012 IEC, Geneva, Switzerland

All rights reserved. Unless otherwise specified, no part of this publication may be reproduced or utilized in any form or by any means, electronic or mechanical, including photocopying and microfilm, without permission in writing from either IEC or IEC's member National Committee in the country of the requester.
If you have any questions about IEC copyright or have an enquiry about obtaining additional rights to this publication, please contact the address below or your local IEC member National Committee for further information.

IEC Central Office
3, rue de Varembé
CH-1211 Geneva 20
Switzerland

Tel.: +41 22 919 02 11
Fax: +41 22 919 03 00
info@iec.ch
www.iec.ch

About the IEC

The International Electrotechnical Commission (IEC) is the leading global organization that prepares and publishes International Standards for all electrical, electronic and related technologies.

About IEC publications

The technical content of IEC publications is kept under constant review by the IEC. Please make sure that you have the latest edition, a corrigenda or an amendment might have been published.

Useful links:

IEC publications search - www.iec.ch/searchpub

The advanced search enables you to find IEC publications by a variety of criteria (reference number, text, technical committee,…).
It also gives information on projects, replaced and withdrawn publications.

Electropedia - www.electropedia.org

The world's leading online dictionary of electronic and electrical terms containing more than 30 000 terms and definitions in English and French, with equivalent terms in additional languages. Also known as the International Electrotechnical Vocabulary (IEV) on-line.

IEC Just Published - webstore.iec.ch/justpublished

Stay up to date on all new IEC publications. Just Published details all new publications released. Available on-line and also once a month by email.

Customer Service Centre - webstore.iec.ch/csc

If you wish to give us your feedback on this publication or need further assistance, please contact the Customer Service Centre: csc@iec.ch.

iTeh Standards
(https://standards.iteh.ai)
Document Preview

IEC 61169-44:2012
https://standards.iteh.ai/catalog/standards/iec/57adc6b5-66ba-488f-b44d-8ff7eb14a69b/iec-61169-44-2012

IEC 61169-44

Edition 1.0 2012-12

INTERNATIONAL STANDARD

colour inside

Radio-frequency connectors – Part 44: Sectional specification for series SMP push-on radio-frequency coaxial connectors

iTeh Standards
(https://standards.iteh.ai)
Document Preview

IEC 61169-44:2012
https://standards.iteh.ai/catalog/standards/iec/57adc6b5-66ba-488f-b44d-8ff7eb14a69b/iec-61169-44-2012

INTERNATIONAL ELECTROTECHNICAL COMMISSION

PRICE CODE V

ICS 33.120.30

ISBN 978-2-83220-565-5

Warning! Make sure that you obtained this publication from an authorized distributor.

® Registered trademark of the International Electrotechnical Commission

CONTENTS

FOREWORD 4
1 Scope 6
2 Normative references 6
3 Mating face and gauge information 7
3.1 Dimensions – General connectors – Grade 1 7
3.1.1 Connector with pin-centre contact 7
3.1.2 Connector with socket-centre contact 10
3.2 Gauges 11
3.2.1 Gauge pin for socket-centre contact 11
3.2.2 Gauge for outer contact of connector with socket-centre contact 12
3.3 Dimensions – standard test connectors – grade 0 16
3.3.1 Connector with pin-centre contact 16
3.3.2 Connector with socket-centre contact 18
4 Quality assessment procedure 19
4.1 General 19
4.2 Rating and characteristics (see Clause 6 of IEC 61169-1) 19
4.3 Test schedule and inspection requirements-Acceptance tests 23
4.3.1 Periodic tests 23
4.4 Procedures 25
4.4.1 Quality conformance inspection 25
4.4.2 Qualification approval and its maintenance 25
5 Instructions for preparation of detail specifications 25
5.1 General 25
5.2 Identification of the component 25
5.3 Performance 26
5.4 Marking, ordering information and related matters 26
5.5 Selection of tests, test conditions and severities 26
5.6 Blank detail specification pro-forma for series SMP connectors 27

Figure 1 – Connector with pin-centre contact – Limited detent and full detent (for dimensions and notes, see Table 1) 7
Figure 2 – Connector with pin- centre contact – Smooth bore (for dimensions and notes, see Table 2) 8
Figure 3 – Connector with pin- centre contact – Catchers mit (for dimensions and notes, see Table 3) 9
Figure 4 – Connector with socket-centre contact (for dimensions and notes, see Table 4) 10
Figure 5 – Gauge pin for socket-centre contact (for dimensions and notes, see Table 5) 11
Figure 6 – Gauge with limited detent for outer contact of connector with socket-outer contact (for dimensions and notes, see Table 6) 12
Figure 7 – Gauge pin – Full detent for outer contact of connector with socket-centre (for dimensions and notes, see Table 7) 13
Figure 8 – Gauge pin – Smooth bore for outer contact of connector with socket-centre (for dimensions and notes, see Table 8) 15
Figure 9 – Connector with pin- centre contact – Limited detent and full detent (for dimensions and notes, see Table 9) 16

iTeh Standards (https://standards.iteh.ai) Document Preview
IEC 61169-44:2012
https://standards.iteh.ai/catalog/standards/iec/1fa0e0ee-e0ab-4ea2-8a1f-e0f4a0e9e1ec/iec-61169-44-2012

Figure 10 – Connector with pin- centre contact – Smooth bore (for dimensions and notes, see Table 10) 17
Figure 11 – Connector with socket-centre contact (for dimensions and notes, see Table 11) 18

Table 1 – Dimensions of connector with pin-centre contact – Limited detent and full detent 7
Table 2 – Dimensions of connector with pin-centre contact – Smooth bore 8
Table 3 – Dimensions of connector with pin-centre contact – Catchers mit..... 9
Table 4 – Dimensions of connector with socket-centre contact..... 10
Table 5 – Dimensions of gauge pin for socket-centre contact..... 11
Table 6 – Gauge with limited detent for outer contact of connector with socket-outer contact..... 12
Table 7 – Gauge pin – Full detent for outer contact of connector with socket-centre 14
Table 8 – Gauge pin – Smooth bore for outer contact of connector with socket-centre..... 15
Table 9 – Dimensions of connector with pin-centre contact – Limited detent and full detent 16
Table 10 – Dimensions of connector with pin-centre contact – Smooth bore 17
Table 11 – Dimensions of connector with socket-centre contact..... 18
Table 12 – Rating and characteristics 19
Table 13 – Acceptance tests 23
Table 14 – Periodic tests 24

iTeh Standards
(https://standards.iteh.ai)
Document Preview
IEC 61169-44:2012
https://standards.iteh.ai/catalog/standards/iec/57adc6b5-66ba-488f-b44d-8ff7eb14a69b/iec-61169-44-2012

INTERNATIONAL ELECTROTECHNICAL COMMISSION

RADIO-FREQUENCY CONNECTORS –

Part 44: Sectional specification for series SMP push-on radio-frequency coaxial connectors

FOREWORD

1) The International Electrotechnical Commission (IEC) is a worldwide organization for standardization comprising all national electrotechnical committees (IEC National Committees). The object of IEC is to promote international co-operation on all questions concerning standardization in the electrical and electronic fields. To this end and in addition to other activities, IEC publishes International Standards, Technical Specifications, Technical Reports, Publicly Available Specifications (PAS) and Guides (hereafter referred to as "IEC Publication(s)"). Their preparation is entrusted to technical committees; any IEC National Committee interested in the subject dealt with may participate in this preparatory work. International, governmental and non-governmental organizations liaising with the IEC also participate in this preparation. IEC collaborates closely with the International Organization for Standardization (ISO) in accordance with conditions determined by agreement between the two organizations.
2) The formal decisions or agreements of IEC on technical matters express, as nearly as possible, an international consensus of opinion on the relevant subjects since each technical committee has representation from all interested IEC National Committees.
3) IEC Publications have the form of recommendations for international use and are accepted by IEC National Committees in that sense. While all reasonable efforts are made to ensure that the technical content of IEC Publications is accurate, IEC cannot be held responsible for the way in which they are used or for any misinterpretation by any end user.
4) In order to promote international uniformity, IEC National Committees undertake to apply IEC Publications transparently to the maximum extent possible in their national and regional publications. Any divergence between any IEC Publication and the corresponding national or regional publication shall be clearly indicated in the latter.
5) IEC itself does not provide any attestation of conformity. Independent certification bodies provide conformity assessment services and, in some areas, access to IEC marks of conformity. IEC is not responsible for any services carried out by independent certification bodies.
6) All users should ensure that they have the latest edition of this publication.
7) No liability shall attach to IEC or its directors, employees, servants or agents including individual experts and members of its technical committees and IEC National Committees for any personal injury, property damage or other damage of any nature whatsoever, whether direct or indirect, or for costs (including legal fees) and expenses arising out of the publication, use of, or reliance upon, this IEC Publication or any other IEC Publications.
8) Attention is drawn to the Normative references cited in this publication. Use of the referenced publications is indispensable for the correct application of this publication.
9) Attention is drawn to the possibility that some of the elements of this IEC Publication may be the subject of patent rights. IEC shall not be held responsible for identifying any or all such patent rights.

iTeh Standards
(https://standards.iteh.ai)
Document Preview
IEC 61169-44:2012
https://standards.iteh.ai/catalog/standards/sist/[illegible]4d-8ff7eb14a69b/iec-61169-44-2012

International Standard IEC 61169-44 has been prepared by subcommittee 46F: R.F. and microwave passive components, of IEC technical committee 46: Cables, wires, waveguides, R.F. connectors, R.F. and microwave passive components and accessories.

This first edition cancels and replaces IEC/PAS 61169-44, published in 2010, of which it constitutes a minor revision. The only change is that the PAS has been changed into an International Standard.

The text of this standard is based on the following documents:

CDV	Report on voting
46F/184/CDV	46F/194/RVC

Full information on the voting for the approval of this standard can be found in the report on voting indicated in the above table.

This publication has been drafted in accordance with the ISO/IEC Directives, Part 2.

A list of all parts of the IEC 61169 series, published under the general title *Radio-frequency connectors*, can be found on the IEC website.

The committee has decided that the contents of this publication will remain unchanged until the stability date indicated on the IEC web site under "http://webstore.iec.ch" in the data related to the specific publication. At this date, the publication will be

- reconfirmed,
- withdrawn,
- replaced by a revised edition, or
- amended.

A bilingual version of this publication may be issued at a later date.

iTeh Standards
(https://standards.iteh.ai)
Document Preview

IMPORTANT – The 'colour inside' logo on the cover page of this publication indicates that it contains colours which are considered to be useful for the correct understanding of its contents. Users should therefore print this document using a colour printer.

IEC 61169-44:2012
https://standards.iteh.ai/catalog/standards/iec/57adc6b5-66ba-488f-b44d-8ff7eb14a69b/iec-61169-44-2012

RADIO-FREQUENCY CONNECTORS –

Part 44: Sectional specification for series SMP push-on radio-frequency coaxial connectors

1 Scope

This part of IEC 61169 which is a sectional specification (SS) provides information and rules for preparation of detail specification of SMP series push-on RF coaxial connectors together with the pro-forma blank detail specification.

The SMP push-on series connectors with characteristic impedance of 50 Ω are used with RF cables or micro-strips in microwave, telecommunication, wireless and other fields. The operating frequency limit is up to 40 GHz.

It also prescribes mating face dimensions for general purpose connectors – grade 1, dimensional details of standard test connectors – grade 0, gauging information and tests selected from IEC 61169-1, applicable to all detail specifications relating to series SMP RF connectors.

This specification indicates the recommended performance characteristics to be considered when writing a detail specification and it covers test schedules and inspection requirements for assessment levels M and H.

iTeh Standards
(https://standards.iteh.ai)
Document Preview

NOTE Metric dimension are original dimensions.

All undimensioned pictorial configurations are for reference purpose only.

IEC 61169-44:2012
https://standards.iteh.ai/catalog/standards/iec/57adc6b5-66ba-488f-b44d-8ff7eb14a69b/iec-61169-44-2012

2 Normative references

The following documents, in whole or in part, are normatively referenced in this document and are indispensable for its application. For dated references, only the edition cited applies. For undated references, the latest edition of the referenced document (including any amendments) applies.

IEC 61169-1:1992, *Radio-frequency connectors – Part 1: Generic specification – General requirements and measuring methods*[1]
Amendment 1:1996
Amendment 2:1997

[1] There exists a consolidated edition 1.2 (1998) that comprises IEC 61169-1:1992, its Amendment 1:1996 and its Amendment 2:1997.

3 Mating face and gauge information

3.1 Dimensions – General connectors – Grade 1

3.1.1 Connector with pin-centre contact

3.1.1.1 Connector with pin-centre contact – Limited detent and full detent

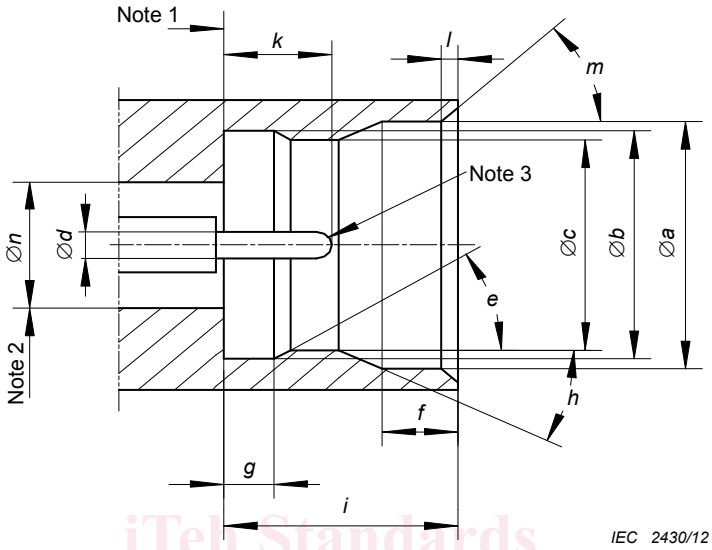

Figure 1 – Connector with pin-centre contact – Limited detent and full detent
(for dimensions and notes, see Table 1)

iTeh Standards
(https://standards.iteh.ai)
Document Preview

Table 1 – Dimensions of connector with pin-centre contact – Limited detent and full detent

Ref.	mm		Notes
	Min.	Max.	
a	3,53	3,68	
b	3,15	3,20	
c	3,02	3,07	Limited detent
	2,92	2,97	Full detent
d	0,38	0,41	
e	30° ± 1°		Angle
f	0,84	0,94	
g	0,52	0,60	
h	32° ± 1°		Angle
i	2,74	2,84	
k	1,14	1,40	
l	0,08	0,20	
m	40°	50°	Angle
n	—	—	

NOTE 1 Mechanical and electrical reference plane.

NOTE 2 The diameter is chosen to meet the nominal impedance of 50 Ω and electrical and mechanical requirements.

NOTE 3 Spherical or chamfered.

https://standards.iteh.ai/catalog/standards/iec/57adc6b5-66b...488f-b44d-...169-44-2012

3.1.1.2 Connector with pin-centre contact – Smooth bore

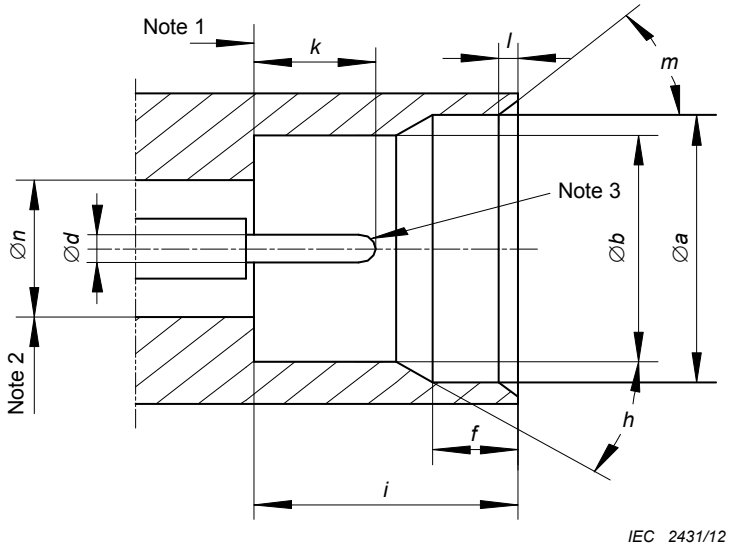

Figure 2 – Connector with pin- centre contact – Smooth bore
(for dimensions and notes, see Table 2)

iTeh Standards
(https://standards.iteh.ai)
Document Preview
IEC 61169-44:2012
https://standards.iteh.ai/catalog/standards/iec/57adc6b5-66b2-488f-b44d-8ff7eb14a69b/iec-61169-44-2012

Table 2 – Dimensions of connector with pin-centre contact – Smooth bore

Ref.	mm		Notes
	Min.	Max.	
a	3,53	3,68	
b	3,15	3,20	
d	0,38	0,41	
f	0,84	0,94	
h	32° ± 1°		Angle
i	2,74	2,84	
k	1,14	1,40	
l	0,08	0,20	
m	40°	50°	Angle
n	—	—	

NOTE 1 Mechanical and electrical reference plane.

NOTE 2 The diameter is chosen to meet the nominal impedance of 50 Ω and electrical and mechanical requirements.

NOTE 3 Spherical or chamfered.

3.1.1.3 Connector with pin-centre contact – Catchers mit

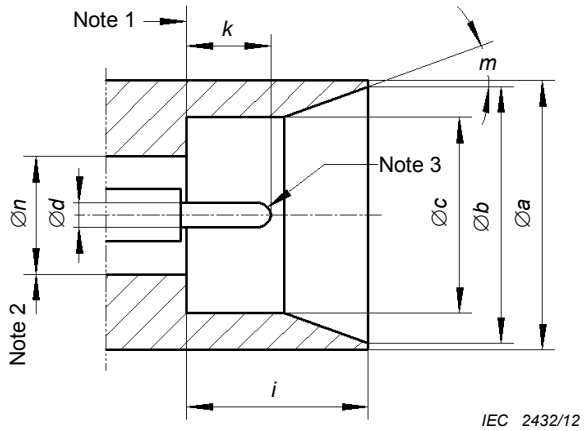

Figure 3 – Connector with pin- centre contact – Catchers mit
(for dimensions and notes, see Table 3)

Table 3 – Dimensions of connector with pin-centre contact – Catchers mit

Ref.	mm		Notes
	Min.	Max.	
a	5,84	—	
b	5,38	5,54	
c	3,15	3,20	
d	0,38	0,41	
i	2,74	2,84	—
k	1,14	1,40	
m	45° ± 2°		Angle
n	—	—	

NOTE 1 Mechanical and electrical reference plane.

NOTE 2 The diameter is chosen to meet the nominal impedance of 50 Ω and electrical and mechanical requirements.

NOTE 3 Spherical or chamfered.

IECNORM.COM : Click to view the full PDF of IEC 61169-44:2012
(https://standards.iteh.ai)
Document Preview
IEC 61169-44:2012
https://standards.iteh.ai/catalog/standards/iec/57a...e6b5-66b8-488f-b44d-9ff7eb14a69b/iec-61169-44-2012