IEC 61169-44

Edition 1.0 2012-12

INTERNATIONAL STANDARD

NORME INTERNATIONALE

colour inside

Radio-frequency connectors – Part 44: Sectional specification for series SMP push-on radio-frequency coaxial connectors

iTeh STANDARD PREVIEW
(standards.iteh.ai)

Connecteurs pour fréquences radioélectriques – Partie 44: Spécification intermédiaire relative aux connecteurs coaxiaux pour fréquences radioélectriques glissants, série SMP

IEC 61169-44:2012
https://standards.iteh.ai/catalog/standards/sist/57adc6b5-66ba-488f-b44d-
IEC 61169-44:2012



IEC 61169-44:2012-12(EN-FR)



THIS PUBLICATION IS COPYRIGHT PROTECTED

Copyright © 2012 IEC, Geneva, Switzerland

All rights reserved. Unless otherwise specified, no part of this publication may be reproduced or utilized in any form or by any means, electronic or mechanical, including photocopying and microfilm, without permission in writing from either IEC or IEC's member National Committee in the country of the requester. If you have any questions about IEC copyright or have an enquiry about obtaining additional rights to this publication, please contact the address below or your local IEC member National Committee for further information.

Droits de reproduction réservés. Sauf indication contraire, aucune partie de cette publication ne peut être reproduite ni utilisée sous quelque forme que ce soit et par aucun procédé, électronique ou mécanique, y compris la photocopie et les microfilms, sans l'accord écrit de l'IEC ou du Comité national de l'IEC du pays du demandeur. Si vous avez des questions sur le copyright de l'IEC ou si vous désirez obtenir des droits supplémentaires sur cette publication, utilisez les coordonnées ci-après ou contactez le Comité national de l'IEC de votre pays de résidence.

IEC Central Office
3, rue de Varembé
CH-1211 Geneva 20
Switzerland

Tel.: +41 22 919 02 11
Fax: +41 22 919 03 00
info@iec.ch
www.iec.ch

About the IEC
The International Electrotechnical Commission (IEC) is the leading global organization that prepares and publishes International Standards for all electrical, electronic and related technologies.

About IEC publications
The technical content of IEC publications is kept under constant review by the IEC. Please make sure that you have the latest edition, a corrigenda or an amendment might have been published.

IEC Catalogue - webstore.iec.ch/catalogue
The stand-alone application for consulting the entire bibliographical information on IEC International Standards, Technical Specifications, Technical Reports and other documents. Available for PC, Mac OS, Android Tablets and iPad.

IEC publications search - www.iec.ch/searchpub
The advanced search enables to find IEC publications by a variety of criteria (reference number, text, technical committee,…). It also gives information on projects, replaced and withdrawn publications.

IEC Just Published - webstore.iec.ch/justpublished
Stay up to date on all new IEC publications. Just Published details all new publications released. Available online and also once a month by email.

Electropedia - www.electropedia.org
The world's leading online dictionary of electronic and electrical terms containing more than 30 000 terms and definitions in English and French, with equivalent terms in 14 additional languages. Also known as the International Electrotechnical Vocabulary (IEV) online.

IEC Glossary - std.iec.ch/glossary
More than 55 000 electrotechnical terminology entries in English and French extracted from the Terms and Definitions clause of IEC publications issued since 2002. Some entries have been collected from earlier publications of IEC TC 37, 77, 86 and CISPR.

IEC Customer Service Centre - webstore.iec.ch/csc
If you wish to give us your feedback on this publication or need further assistance, please contact the Customer Service Centre: csc@iec.ch.

iTeh STANDARD PREVIEW
(standards.iteh.ai)
IEC 61169-44:2012
https://standards.iteh.ai/catalog/standards/sist/2a0c0fc-6b0e-4e04-baae-8ff7eb14a69b/iec-61169-44-2012

A propos de l'IEC
La Commission Electrotechnique Internationale (IEC) est la première organisation mondiale qui élabore et publie des Normes internationales pour tout ce qui a trait à l'électricité, à l'électronique et aux technologies apparentées.

A propos des publications IEC
Le contenu technique des publications IEC est constamment revu. Veuillez vous assurer que vous possédez l'édition la plus récente, un corrigendum ou amendement peut avoir été publié.

Catalogue IEC - webstore.iec.ch/catalogue
Application autonome pour consulter tous les renseignements bibliographiques sur les Normes internationales, Spécifications techniques, Rapports techniques et autres documents de l'IEC. Disponible pour PC, Mac OS, tablettes Android et iPad.

Recherche de publications IEC - www.iec.ch/searchpub
La recherche avancée permet de trouver des publications IEC en utilisant différents critères (numéro de référence, texte, comité d'études,…). Elle donne aussi des informations sur les projets et les publications remplacées ou retirées.

IEC Just Published - webstore.iec.ch/justpublished
Restez informé sur les nouvelles publications IEC. Just Published détaille les nouvelles publications parues. Disponible en ligne et aussi une fois par mois par email.

Electropedia - www.electropedia.org
Le premier dictionnaire en ligne de termes électroniques et électriques. Il contient plus de 30 000 termes et définitions en anglais et en français, ainsi que les termes équivalents dans 14 langues additionnelles. Egalement appelé Vocabulaire Electrotechnique International (IEV) en ligne.

Glossaire IEC - std.iec.ch/glossary
Plus de 55 000 entrées terminologiques électrotechniques, en anglais et en français, extraites des articles Termes et Définitions des publications IEC parues depuis 2002. Plus certaines entrées antérieures extraites des publications des CE 37, 77, 86 et CISPR de l'IEC.

Service Clients - webstore.iec.ch/csc
Si vous désirez nous donner des commentaires sur cette publication ou si vous avez des questions contactez-nous: csc@iec.ch.

IEC 61169-44

Edition 1.0 2012-12

INTERNATIONAL STANDARD

NORME INTERNATIONALE

colour inside

Radio-frequency connectors –
Part 44: Sectional specification for series SMP push-on radio-frequency coaxial connectors

iTeh STANDARD PREVIEW
(standards.iteh.ai)
IEC 61169-44:2012
https://standards.iteh.ai/catalog/standards/sist/37dc6b5-66ba-488f-b44d-8f87fc4a50b/iec-61169-44-2012

Connecteurs pour fréquences radioélectriques –
Partie 44: Spécification intermédiaire relative aux connecteurs coaxiaux pour fréquences radioélectriques glissants, série SMP

INTERNATIONAL
ELECTROTECHNICAL
COMMISSION

COMMISSION
ELECTROTECHNIQUE
INTERNATIONALE

PRICE CODE
CODE PRIX V

ICS 33.120.30

ISBN 978-2-8322-1330-8

Warning! Make sure that you obtained this publication from an authorized distributor.
Attention! Veuillez vous assurer que vous avez obtenu cette publication via un distributeur agréé.

® Registered trademark of the International Electrotechnical Commission
Marque déposée de la Commission Electrotechnique Internationale

CONTENTS

FOREWORD 4
1 Scope 6
2 Normative references 6
3 Mating face and gauge information 7
3.1 Dimensions – General connectors – Grade 1 7
3.1.1 Connector with pin-centre contact 7
3.1.2 Connector with socket-centre contact 10
3.2 Gauges 11
3.2.1 Gauge pin for socket-centre contact 11
3.2.2 Gauge for outer contact of connector with socket-centre contact 12
3.3 Dimensions – standard test connectors – grade 0 16
3.3.1 Connector with pin-centre contact 16
3.3.2 Connector with socket-centre contact 18
4 Quality assessment procedure 19
4.1 General 19
4.2 Rating and characteristics (see Clause 6 of IEC 61169-1) 19
4.3 Test schedule and inspection requirements-Acceptance tests 23
4.3.1 Periodic tests 23
4.4 Procedures 25
4.4.1 Quality conformance inspection 25
4.4.2 Qualification approval and its maintenance 25
5 Instructions for preparation of detail specifications 25
5.1 General 25
5.2 Identification of the component 25
5.3 Performance 26
5.4 Marking, ordering information and related matters 26
5.5 Selection of tests, test conditions and severities 26
5.6 Blank detail specification pro-forma for series SMP connectors 27

Figure 1 – Connector with pin-centre contact – Limited detent and full detent (for dimensions and notes, see Table 1) 7
Figure 2 – Connector with pin- centre contact – Smooth bore (for dimensions and notes, see Table 2) 8
Figure 3 – Connector with pin- centre contact – Catchers mit (for dimensions and notes, see Table 3) 9
Figure 4 – Connector with socket-centre contact (for dimensions and notes, see Table 4) 10
Figure 5 – Gauge pin for socket-centre contact (for dimensions and notes, see Table 5) 11
Figure 6 – Gauge with limited detent for outer contact of connector with socket-outer contact (for dimensions and notes, see Table 6) 12
Figure 7 – Gauge pin – Full detent for outer contact of connector with socket-centre (for dimensions and notes, see Table 7) 13
Figure 8 – Gauge pin – Smooth bore for outer contact of connector with socket-centre (for dimensions and notes, see Table 8) 15
Figure 9 – Connector with pin- centre contact – Limited detent and full detent (for dimensions and notes, see Table 9) 16

iTeh STANDARD PREVIEW
(standards.iteh.ai)
IEC 61169-44:2012
https://standards.iteh.ai/catalog/standards/sist/57adc665-66ba-488f-b44d-8ff7eb14a69b/iec-61169-44-2012

Figure 10 – Connector with pin- centre contact – Smooth bore (for dimensions and notes, see Table 10) 17
Figure 11 – Connector with socket-centre contact (for dimensions and notes, see Table 11) 18

Table 1 – Dimensions of connector with pin-centre contact – Limited detent and full detent 7
Table 2 – Dimensions of connector with pin-centre contact – Smooth bore 8
Table 3 – Dimensions of connector with pin-centre contact – Catchers mit 9
Table 4 – Dimensions of connector with socket-centre contact 10
Table 5 – Dimensions of gauge pin for socket-centre contact 11
Table 6 – Gauge with limited detent for outer contact of connector with socket-outer contact 12
Table 7 – Gauge pin – Full detent for outer contact of connector with socket-centre 14
Table 8 – Gauge pin – Smooth bore for outer contact of connector with socket-centre 15
Table 9 – Dimensions of connector with pin-centre contact – Limited detent and full detent 16
Table 10 – Dimensions of connector with pin-centre contact – Smooth bore 17
Table 11 – Dimensions of connector with socket-centre contact 18
Table 12 – Rating and characteristics 19
Table 13 – Acceptance tests 23
Table 14 – Periodic tests 24

iTeh STANDARD PREVIEW
(standards.iteh.ai)
IEC 61169-44:2012
https://standards.iteh.ai/catalog/standards/sist/57adc6b5-66ba-488f-b44d-8ff7eb14a69b/iec-61169-44-2012

INTERNATIONAL ELECTROTECHNICAL COMMISSION

RADIO-FREQUENCY CONNECTORS –

Part 44: Sectional specification for series SMP push-on radio-frequency coaxial connectors

FOREWORD

1) The International Electrotechnical Commission (IEC) is a worldwide organization for standardization comprising all national electrotechnical committees (IEC National Committees). The object of IEC is to promote international co-operation on all questions concerning standardization in the electrical and electronic fields. To this end and in addition to other activities, IEC publishes International Standards, Technical Specifications, Technical Reports, Publicly Available Specifications (PAS) and Guides (hereafter referred to as "IEC Publication(s)"). Their preparation is entrusted to technical committees; any IEC National Committee interested in the subject dealt with may participate in this preparatory work. International, governmental and non-governmental organizations liaising with the IEC also participate in this preparation. IEC collaborates closely with the International Organization for Standardization (ISO) in accordance with conditions determined by agreement between the two organizations.
2) The formal decisions or agreements of IEC on technical matters express, as nearly as possible, an international consensus of opinion on the relevant subjects since each technical committee has representation from all interested IEC National Committees.
3) IEC Publications have the form of recommendations for international use and are accepted by IEC National Committees in that sense. While all reasonable efforts are made to ensure that the technical content of IEC Publications is accurate, IEC cannot be held responsible for the way in which they are used or for any misinterpretation by any end user.
4) In order to promote international uniformity, IEC National Committees undertake to apply IEC Publications transparently to the maximum extent possible in their national and regional publications. Any divergence between any IEC Publication and the corresponding national or regional publication shall be clearly indicated in the latter.
5) IEC itself does not provide any attestation of conformity. Independent certification bodies provide conformity assessment services and, in some areas, access to IEC marks of conformity. IEC is not responsible for any services carried out by independent certification bodies.
6) All users should ensure that they have the latest edition of this publication.
7) No liability shall attach to IEC or its directors, employees, servants or agents including individual experts and members of its technical committees and IEC National Committees for any personal injury, property damage or other damage of any nature whatsoever, whether direct or indirect, or for costs (including legal fees) and expenses arising out of the publication, use of, or reliance upon, this IEC Publication or any other IEC Publications.
8) Attention is drawn to the Normative references cited in this publication. Use of the referenced publications is indispensable for the correct application of this publication.
9) Attention is drawn to the possibility that some of the elements of this IEC Publication may be the subject of patent rights. IEC shall not be held responsible for identifying any or all such patent rights.

iTeh STANDARD PREVIEW
(standards.iteh.ai)
IEC 61169-44:2012
https://standards.iteh.ai/catalog/standards/sist/57adc6b5-66ba-488f-b44d-8ff2eb1da69b/iec-61169-44-2012

International Standard IEC 61169-44 has been prepared by subcommittee 46F: R.F. and microwave passive components, of IEC technical committee 46: Cables, wires, waveguides, R.F. connectors, R.F. and microwave passive components and accessories.

This first edition cancels and replaces IEC/PAS 61169-44, published in 2010, of which it constitutes a minor revision. The only change is that the PAS has been changed into an International Standard.

This bilingual version (2014-01) corresponds to the monolingual English version, published in 2012-12.

The text of this standard is based on the following documents:

CDV	Report on voting
46F/184/CDV	46F/194/RVC

Full information on the voting for the approval of this standard can be found in the report on voting indicated in the above table.

The French version of this standard has not been voted upon.

This publication has been drafted in accordance with the ISO/IEC Directives, Part 2.

A list of all parts of the IEC 61169 series, published under the general title *Radio-frequency connectors*, can be found on the IEC website.

The committee has decided that the contents of this publication will remain unchanged until the stability date indicated on the IEC web site under "http://webstore.iec.ch" in the data related to the specific publication. At this date, the publication will be

- reconfirmed,
- withdrawn,
- replaced by a revised edition, or
- amended.

iTeh STANDARD PREVIEW
(standards.iteh.ai)

IMPORTANT – The 'colour inside' logo on the cover page of this publication indicates that it contains colours which are considered to be useful for the correct understanding of its contents. Users should therefore print this document using a colour printer.

IEC 61169-44:2012
https://standards.iteh.ai/catalog/standards/sist/...

RADIO-FREQUENCY CONNECTORS –

Part 44: Sectional specification for series SMP push-on radio-frequency coaxial connectors

1 Scope

This part of IEC 61169 which is a sectional specification (SS) provides information and rules for preparation of detail specification of SMP series push-on RF coaxial connectors together with the pro-forma blank detail specification.

The SMP push-on series connectors with characteristic impedance of 50 Ω are used with RF cables or micro-strips in microwave, telecommunication, wireless and other fields. The operating frequency limit is up to 40 GHz.

It also prescribes mating face dimensions for general purpose connectors – grade 1, dimensional details of standard test connectors – grade 0, gauging information and tests selected from IEC 61169-1, applicable to all detail specifications relating to series SMP RF connectors.

iTeh STANDARD PREVIEW

This specification indicates the recommended performance characteristics to be considered when writing a detail specification and it covers test schedules and inspection requirements for assessment levels M and H.

(standards.iteh.ai)

NOTE Metric dimension are original dimensions.

IEC 61169-44:2012
https://standards.iteh.ai/catalog/standards/sist/57adc6b5-66ba-488f-b44d-8ff7eb14a09b/iec-61169-44-2012

All undimensioned pictorial configurations are for reference purpose only.

2 Normative references

The following documents, in whole or in part, are normatively referenced in this document and are indispensable for its application. For dated references, only the edition cited applies. For undated references, the latest edition of the referenced document (including any amendments) applies.

IEC 61169-1:1992, *Radio-frequency connectors – Part 1: Generic specification – General requirements and measuring methods*[1]
Amendment 1:1996
Amendment 2:1997

[1] There exists a consolidated edition 1.2 (1998) that comprises IEC 61169-1:1992, its Amendment 1:1996 and its Amendment 2:1997.

3 Mating face and gauge information

3.1 Dimensions – General connectors – Grade 1

3.1.1 Connector with pin-centre contact

3.1.1.1 Connector with pin-centre contact – Limited detent and full detent

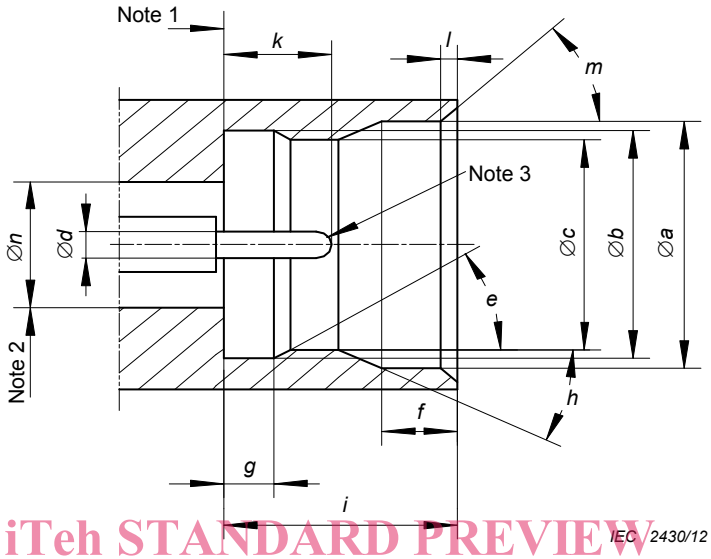

iTeh STANDARD PREVIEW

Figure 1 – Connector with pin-centre contact – Limited detent and full detent

(standards.iteh.ai)

(for dimensions and notes, see Table 1)

IEC 61169-44:2012
https://standards.iteh.ai/catalog/standards/sist/5fadc6b5-66ba-488f-b44d-8ff7eb14a69b/iec-61169-44-2012

Table 1 – Dimensions of connector with pin-centre contact – Limited detent and full detent

Ref.	mm		Notes
	Min.	Max.	
a	3,53	3,68	
b	3,15	3,20	
c	3,02	3,07	Limited detent
	2,92	2,97	Full detent
d	0,38	0,41	
e	30° ± 1°		Angle
f	0,84	0,94	
g	0,52	0,60	
h	32° ± 1°		Angle
i	2,74	2,84	
k	1,14	1,40	
l	0,08	0,20	
m	40°	50°	Angle
n	—	—	

NOTE 1 Mechanical and electrical reference plane.

NOTE 2 The diameter is chosen to meet the nominal impedance of 50 Ω and electrical and mechanical requirements.

NOTE 3 Spherical or chamfered.

3.1.1.2 Connector with pin-centre contact – Smooth bore

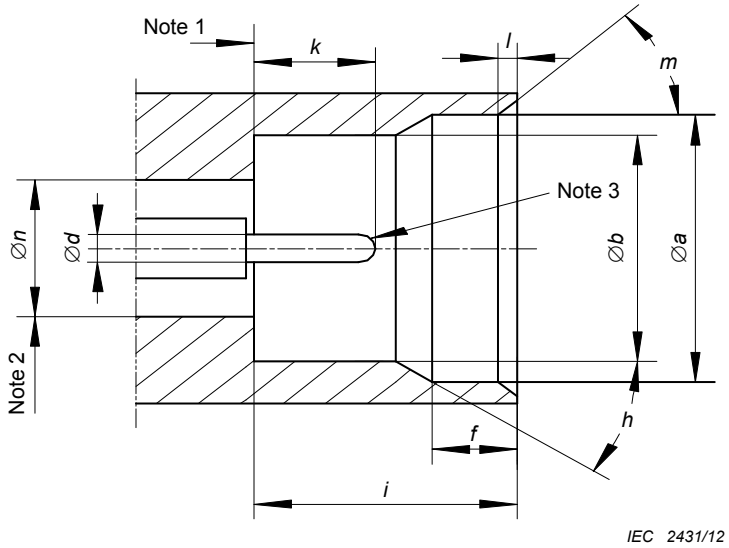

Figure 2 – Connector with pin- centre contact – Smooth bore
(for dimensions and notes, see Table 2)

iTeh STANDARD PREVIEW

Table 2 – Dimensions of connector with pin-centre contact – Smooth bore

(standards.iteh.ai)

Ref.	mm		Notes
	Min.	Max.	
a	3,53	3,68	
b	3,15	3,20	
d	0,38	0,41	
f	0,84	0,94	
h	32° ± 1°		Angle
i	2,74	2,84	
k	1,14	1,40	
l	0,08	0,20	
m	40°	50°	Angle
n	—	—	

NOTE 1 Mechanical and electrical reference plane.

NOTE 2 The diameter is chosen to meet the nominal impedance of 50 Ω and electrical and mechanical requirements.

NOTE 3 Spherical or chamfered.

IEC 61169-44:2012
https://standards.iteh.ai/catalog/standards/sist/57adc6b5-66ba-488f-b44d-8ff7eb14a69b/iec-61169-44-2012

3.1.1.3 Connector with pin-centre contact – Catchers mit

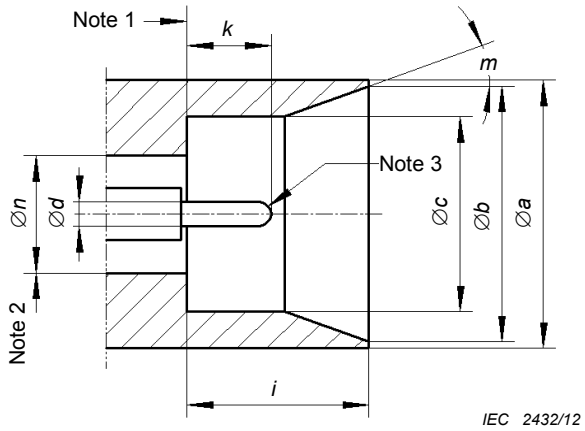

Figure 3 – Connector with pin- centre contact – Catchers mit
(for dimensions and notes, see Table 3)

Table 3 – Dimensions of connector with pin-centre contact – Catchers mit

Ref.	mm		Notes
	Min.	Max.	
a	5,84	—	
b	5,38	5,54	
c	3,15	3,20	
d	0,38	0,41	
i	2,74	2,84	—
k	1,14	1,40	
m	45° ± 2°		Angle
n	—	—	

NOTE 1 Mechanical and electrical reference plane.

NOTE 2 The diameter is chosen to meet the nominal impedance of 50 Ω and electrical and mechanical requirements.

NOTE 3 Spherical or chamfered.

iTeh STANDARD PREVIEW
(standards.iteh.ai)
IEC 61169-44:2012
https://standards.iteh.ai/catalog/standards/sist/55...6b5-66ba-488f-b44d-8ff7eb14a696/iec-61169-44-2012

3.1.2 Connector with socket-centre contact

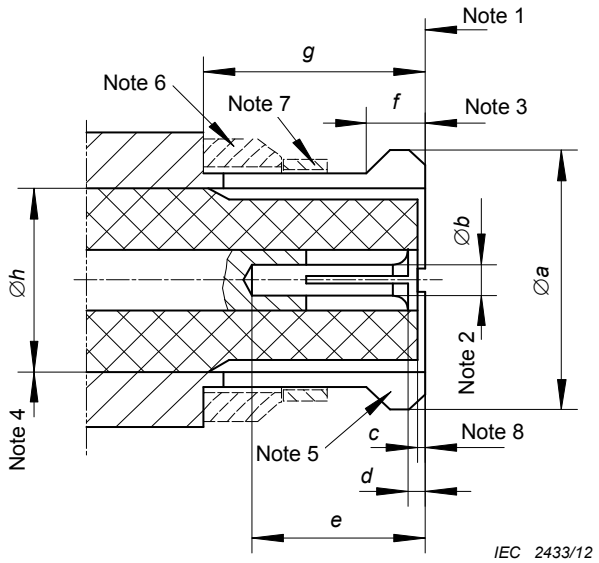

Figure 4 – Connector with socket-centre contact
(for dimensions and notes, see Table 4)

iTeh STANDARD PREVIEW
(standards.iteh.ai)

Table 4 – Dimensions of connector with socket-centre contact

IEC 61169-44:2012
https://standards.iteh.ai/catalog/standards/sist/57a...-66ba-488f-b...-8ff7eb14a69b/iec-61169-44-2012

Ref.	mm		Notes
	Min.	Max.	
a	—	3,43	
b	—	—	
c	0,00	—	
d	0,00	0,20	
e	1,78	—	
f	0,46	0,64	Uncabled
	0,64	0,89	Cabled
g	2,84	—	
h	—	—	

NOTE 1 Mechanical and electrical reference plane.

NOTE 2 Bore diameter and closure to meet electrical and mechanical requirements.

NOTE 3 The form and dimensions of outer conductor to meet mechanical and electrical requirements.

NOTE 4 Diameter is chosen upon the assumption that the PTFE dielectric has a dielectric constant of 2,02 to give an impedance of 50 Ω.

NOTE 5 The number and dimension of slots allows to meet mechanical and electrical requirements.

NOTE 6 Anti-rock ring is required for cabled connectors, optional for all others.

NOTE 7 EMI ring (shield) is required for cabled connectors, optional for all others.

NOTE 8 To meet electrical requirement.

3.2 Gauges

3.2.1 Gauge pin for socket-centre contact

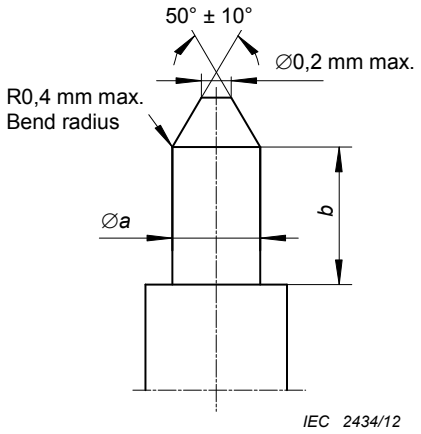

Figure 5 – Gauge pin for socket-centre contact
(for dimensions and notes, see Table 5)

iTeh STANDARD PREVIEW

Table 5 – Dimensions of gauge pin for socket-centre contact

(standards.iteh.ai)

Ref.	Gauge A (for sizing purposes)		Gauge B (for measurement of retention force for inner conductor) Mass of gauge: (14+2) g	
	mm		mm	
	Min.	**Max.**	**Min.**	**Max.**
a	0,410	0,415	0,375	0,380
b	1,00	1,14	1,00	1,14
Material: steel, polished.				
Surface roughness: *Ra*≤0,4 μm, on the cylindrical surface of length *b*.				

IEC 61169-44:2012
https://standards.iteh.ai/catalog/standards/sist/3/ade6b5-66ba-4...
8ff7eb14a69b/iec-61169-44-2012

3.2.1.1 Test procedure

The gauge A shall be inserted into the socket-centre contact three times with a minimum depth of 1,00 mm. This is a sizing operation and should only be carried out when the socket-centre contact is removed from the connector.

After this, the gauge B shall be inserted into socket-centre contact. The contact shall retain the mass of the gauge in a vertical downward position. The test should also be carried out on connector when the socket-centre contact is not removed.

3.2.1.2 Additional test

At the conclusion of the tests and if prescribed in the DS, the force necessary to insert gauge A shall be measured. When the additional test is required, the force required shall not exceed 6,67 N.

3.2.2 Gauge for outer contact of connector with socket-centre contact

3.2.2.1 Gauge with limited detent for outer contact of connector with socket-centre contact

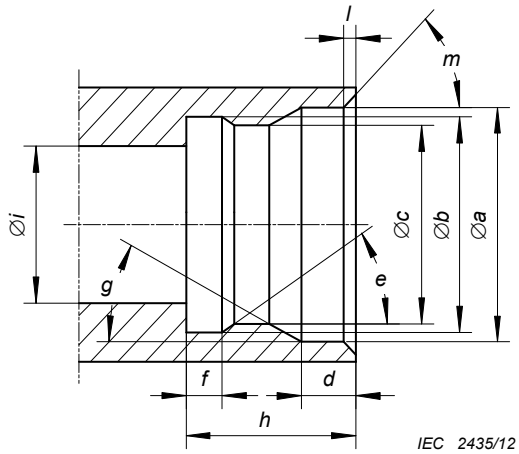

Figure 6 – Gauge with limited detent for outer contact of connector with socket-outer contact
(for dimensions and notes, see Table 6)

iTeh STANDARD PREVIEW
(standards.iteh.ai)

Table 6 – Gauge with limited detent for outer contact of connector with socket-outer contact

IEC 61169-44:2012
https://standards.iteh.ai/catalog/standards/sist/57adc6b5-66ba-488f-b44d-8ff7eb14a69b/iec-61169-44-2012

Ref	Gauge A (for sizing purposes)		Gauge B (for measurement of retention force for inner conductor) Mass of gauge: (900+20) g		Notes
	mm		mm		
	Min.	Max.	Min.	Max.	
a	3,53	3,68	3,53	3,68	
b	3,13	3,23	3,13	3,23	
c	3,00	3,02	3,08	3,10	Note 1
d	0,84	0,94	0,84	0,94	
e	28°	32°	28°	32°	Note 2
f	0,52	0,60	0,52	0,60	
g	33°	37°	33°	37°	Note 3
h	2,74	2,84	2,74	2,84	
i	—	2,40	—	2,40	
l	0,08	0,20	0,08	0,20	
m	40°	50°	40°	50°	
Material: steel, polished.					
NOTE 1 Surface roughness: *Ra*≤0,4 μm, on the cylindrical surface of length *c*.					
NOTE 2 Surface roughness: *Ra*≤0,4 μm, on the slope surface of angle *e*.					
NOTE 3 Surface roughness: *Ra*≤0,4 μm, on the slope surface of angle *g*.					

3.2.2.1.1 Test procedure

The outer contact shall be inserted into the gauge A once. This is a sizing operation.

After this, the outer contact shall be inserted into the gauge B. The outer contact shall retain the gauge in a vertical downward direction.

3.2.2.1.2 Additional test

After the sizing and if prescribed in the DS, the force required to insert gauge A shall be measured. This force shall not exceed 45 N.

3.2.2.2 Gauge pin – Full detent for outer contact of connector with socket-centre

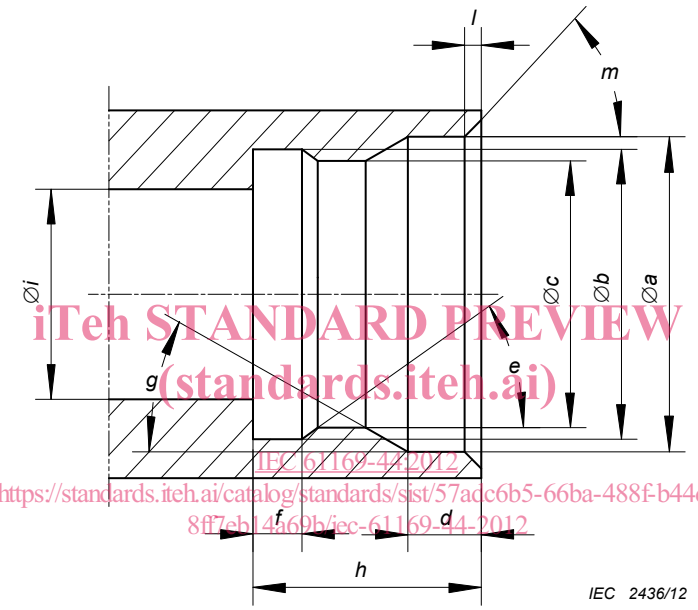

iTeh STANDARD PREVIEW
(standards.iteh.ai)
IEC 61169-44:2012
https://standards.iteh.ai/catalog/standards/sist/57adc6b5-66ba-488f-b44d-8ff7eb14a69b/iec-61169-44-2012

Figure 7 – Gauge pin – Full detent for outer contact of connector with socket-centre
(for dimensions and notes, see Table 7)