IEC 61326-2-2

Edition 2.0 2012-10

INTERNATIONAL STANDARD

NORME INTERNATIONALE

Electrical equipment for measurement, control and laboratory use – EMC requirements – Part 2-2: Particular requirements – Test configurations, operational conditions and performance criteria for portable test, measuring and monitoring equipment used in low-voltage distribution systems

Matériel électrique de mesure, de commande et de laboratoire – Exigences relatives à la CEM – Partie 2-2: Exigences particulières – Configurations d'essai, conditions de fonctionnement et critères de performance des matériels portatifs d'essai, de mesure et de surveillance utilisés dans des systèmes de distribution basse tension

IEC Central Office
3, rue de Varembé
CH-1211 Geneva 20
Switzerland

Tel.: +41 22 919 02 11
Fax: +41 22 919 03 00
info@iec.ch
www.iec.ch

About the IEC

The International Electrotechnical Commission (IEC) is the leading global organization that prepares and publishes International Standards for all electrical, electronic and related technologies.

About IEC publications

The technical content of IEC publications is kept under constant review by the IEC. Please make sure that you have the latest edition, a corrigenda or an amendment might have been published.

Useful links:

IEC publications search - www.iec.ch/searchpub

The advanced search enables you to find IEC publications by a variety of criteria (reference number, text, technical committee,…).
It also gives information on projects, replaced and withdrawn publications.

Electropedia - www.electropedia.org

The world's leading online dictionary of electronic and electrical terms containing more than 30 000 terms and definitions in English and French, with equivalent terms in additional languages. Also known as the International Electrotechnical Vocabulary (IEV) on-line.

IEC Just Published - webstore.iec.ch/justpublished

Stay up to date on all new IEC publications. Just Published details all new publications released. Available on-line and also once a month by email.

Customer Service Centre - webstore.iec.ch/csc

If you wish to give us your feedback on this publication or need further assistance, please contact the Customer Service Centre: csc@iec.ch.

A propos de la CEI

La Commission Electrotechnique Internationale (CEI) est la première organisation mondiale qui élabore et publie des Normes internationales pour tout ce qui a trait à l'électricité, à l'électronique et aux technologies apparentées.

A propos des publications CEI

Le contenu technique des publications de la CEI est constamment revu. Veuillez vous assurer que vous possédez l'édition la plus récente, un corrigendum ou amendement peut avoir été publié.

Liens utiles:

Recherche de publications CEI - www.iec.ch/searchpub

La recherche avancée vous permet de trouver des publications CEI en utilisant différents critères (numéro de référence, texte, comité d'études,…).
Elle donne aussi des informations sur les projets et les publications remplacées ou retirées.

Just Published CEI - webstore.iec.ch/justpublished

Restez informé sur les nouvelles publications de la CEI. Just Published détaille les nouvelles publications parues. Disponible en ligne et aussi une fois par mois par email.

Electropedia - www.electropedia.org

Le premier dictionnaire en ligne au monde de termes électroniques et électriques. Il contient plus de 30 000 termes et définitions en anglais et en français, ainsi que les termes équivalents dans les langues additionnelles. Egalement appelé Vocabulaire Electrotechnique International (VEI) en ligne.

Service Clients - webstore.iec.ch/csc

Si vous désirez nous donner des commentaires sur cette publication ou si vous avez des questions contactez-nous: csc@iec.ch.

IEC 61326-2-2

Edition 2.0 2012-10

INTERNATIONAL STANDARD

NORME INTERNATIONALE

Electrical equipment for measurement, control and laboratory use – EMC requirements – Part 2-2: Particular requirements – Test configurations, operational conditions and performance criteria for portable test, measuring and monitoring equipment used in low-voltage distribution systems

Matériel électrique de mesure, de commande et de laboratoire – Exigences relatives à la CEM – Partie 2-2: Exigences particulières – Configurations d'essai, conditions de fonctionnement et critères de performance des matériels portatifs d'essai, de mesure et de surveillance utilisés dans des systèmes de distribution basse tension

INTERNATIONAL
ELECTROTECHNICAL
COMMISSION

COMMISSION
ELECTROTECHNIQUE
INTERNATIONALE

PRICE CODE
CODE PRIX J

ICS 17.220; 25.040.40; 33.100

ISBN 978-2-83220-397-2

Warning! Make sure that you obtained this publication from an authorized distributor.
Attention! Veuillez vous assurer que vous avez obtenu cette publication via un distributeur agréé.

CONTENTS

INTERNATIONAL ELECTROTECHNICAL COMMISSION

ELECTRICAL EQUIPMENT FOR MEASUREMENT, CONTROL AND LABORATORY USE – EMC REQUIREMENTS –

Part 2-2: Particular requirements – Test configurations, operational conditions and performance criteria for portable test, measuring and monitoring equipment used in low-voltage distribution systems

FOREWORD

1) The International Electrotechnical Commission (IEC) is a worldwide organization for standardization comprising all national electrotechnical committees (IEC National Committees). The object of IEC is to promote international co-operation on all questions concerning standardization in the electrical and electronic fields. To this end and in addition to other activities, IEC publishes International Standards, Technical Specifications, Technical Reports, Publicly Available Specifications (PAS) and Guides (hereafter referred to as "IEC Publication(s)"). Their preparation is entrusted to technical committees; any IEC National Committee interested in the subject dealt with may participate in this preparatory work. International, governmental and non-governmental organizations liaising with the IEC also participate in this preparation. IEC collaborates closely with the International Organization for Standardization (ISO) in accordance with conditions determined by agreement between the two organizations.

2) The formal decisions or agreements of IEC on technical matters express, as nearly as possible, an international consensus of opinion on the relevant subjects since each technical committee has representation from all interested IEC National Committees.

3) IEC Publications have the form of recommendations for international use and are accepted by IEC National Committees in that sense. While all reasonable efforts are made to ensure that the technical content of IEC Publications is accurate, IEC cannot be held responsible for the way in which they are used or for any misinterpretation by any end user.

4) In order to promote international uniformity, IEC National Committees undertake to apply IEC Publications transparently to the maximum extent possible in their national and regional publications. Any divergence between any IEC Publication and the corresponding national or regional publication shall be clearly indicated in the latter.

5) IEC itself does not provide any attestation of conformity. Independent certification bodies provide conformity assessment services and, in some areas, access to IEC marks of conformity. IEC is not responsible for any services carried out by independent certification bodies.

6) All users should ensure that they have the latest edition of this publication.

7) No liability shall attach to IEC or its directors, employees, servants or agents including individual experts and members of its technical committees and IEC National Committees for any personal injury, property damage or other damage of any nature whatsoever, whether direct or indirect, or for costs (including legal fees) and expenses arising out of the publication, use of, or reliance upon, this IEC Publication or any other IEC Publications.

8) Attention is drawn to the Normative references cited in this publication. Use of the referenced publications is indispensable for the correct application of this publication.

9) Attention is drawn to the possibility that some of the elements of this IEC Publication may be the subject of patent rights. IEC shall not be held responsible for identifying any or all such patent rights.

International Standard IEC 61326-2-2 has been prepared by subcommittee 65A: System aspects, of IEC technical committee 65: Industrial-process measurement, control and automation.

This second edition cancels and replaces the first edition published in 2005. This edition constitutes a technical revision.

The main technical changes with regard to the previous edition are as follows:

– Update with respect to IEC 61326-1:2012.

The text of this standard is based on the following documents:

FDIS	Report on voting
65A/642/FDIS	65A/653/RVD

Full information on the voting for the approval of this standard can be found in the report on voting indicated in the above table.

This publication has been drafted in accordance with the ISO/IEC Directives, Part 2.

This part of IEC 61326 series is to be used in conjunction with IEC 61326-1:2012 and follows the same numbering of clauses, subclauses, tables and figures.

When a particular subclause of IEC 61326-1 is not mentioned in this part, that subclause applies as far as is reasonable. When this standard states “addition”, “modification” or “replacement”, the relevant text in IEC 61326-1 is to be adapted accordingly.

NOTE The following numbering system is used:

– subclauses, tables and figures that are numbered starting from 101 are additional to those in IEC 61326-1;
– unless notes are in a new subclause or involve notes in IEC 61326-1, they are numbered starting from 101 including those in a replaced clause or subclause;
– additional annexes are lettered AA, BB, etc.

A list of all parts of IEC 61326 series, under the general title *Electrical equipment for measurement, control and laboratory use – EMC requirements* can be found on the IEC website.

The committee has decided that the contents of this publication will remain unchanged until the stability date indicated on the IEC web site under "http://webstore.iec.ch" in the data related to the specific publication. At this date, the publication will be

- reconfirmed,
- withdrawn,
- replaced by a revised edition, or
- amended.

ELECTRICAL EQUIPMENT FOR MEASUREMENT, CONTROL AND LABORATORY USE – EMC REQUIREMENTS –

Part 2-2: Particular requirements – Test configurations, operational conditions and performance criteria for portable test, measuring and monitoring equipment used in low-voltage distribution systems

1 Scope

In addition to the scope of IEC 61326-1, this part of IEC 61326 specifies more detailed test configurations, operational conditions and performance criteria for equipment covered by Annex A of IEC 61326-1 which is:

– used for testing, measuring or monitoring of protective measures in low-voltage distribution systems, and;

– powered by battery and/or from the circuit measured, and

– portable.

Examples of such EUT include, but are not limited to, voltage detectors, insulation testers, earth continuity testers, earth resistance testers, loop impedance testers, “residual-current-device-testers” (RCD-testers) and phase sequence testers as defined in IEC 61557.

NOTE Particular EMC requirements for equipment covered by IEC 61557-8 and IEC 61557-9 are given in IEC 61326-2-4.

The manufacturer specifies the environment for which the product is intended to be used and/or select the appropriate test level specifications of IEC 61326-1.

2 Normative references

The following documents, in whole or in part, are normatively referenced in this document and are indispensable for its application. For dated references, only the edition cited applies. For undated references, the latest edition of the referenced document (including any amendments) applies.

Clause 2 of IEC 61326-1:2012 applies, except as follows:

Addition:

IEC 61326-1:2012, *Electrical equipment for measurement, control and laboratory use – EMC requirements – Part 1: General requirements*

IEC 61557 (all parts), *Electrical safety in low voltage distribution systems up to 1 000 V a.c. and 1 500 V d.c. – Equipment for testing, measuring or monitoring of protective measures*

3 Terms and definitions

For the purposes of this document, the terms and definitions given in IEC 61326-1 and IEC 60050-161 apply.

4 General

Clause 4 of IEC 61326-1 applies.

5 EMC test plan

5.1 General

Subclause 5.1 of IEC 61326-1 applies.

5.2 Configuration of EUT during testing

Subclause 5.2 of IEC 61326-1 applies, except as follows:

Addition:

5.2.4.101 Test and measurement I/O ports

Electrostatic discharge shall be applied to the housing, to the terminals of the EUT and to the coupling planes, but not to the inner pins of shielded port or cable connectors (for example, BNC, D-subminiature, IEEE 488 (GPIB), RS232, IEEE 1284-B (parallel printer port), etc.).

For the test according to IEC 61000-4-3 the following conditions shall be met. Test and measurement ports shall be connected with test leads recommended or supplied with the EUT. Where the test leads are unspecified, typical test leads shall be used. The test leads shall be connected and arranged in a typical configuration for each operation mode, according to Figure 101.

If the test leads recommended or supplied are longer than 1 m, each one should be bundled up so that the test or measurement object is in a (horizontal) distance of 1 m to the EUT.

The test leads shall be arranged 0,1 m apart in a horizontal position on the test table.

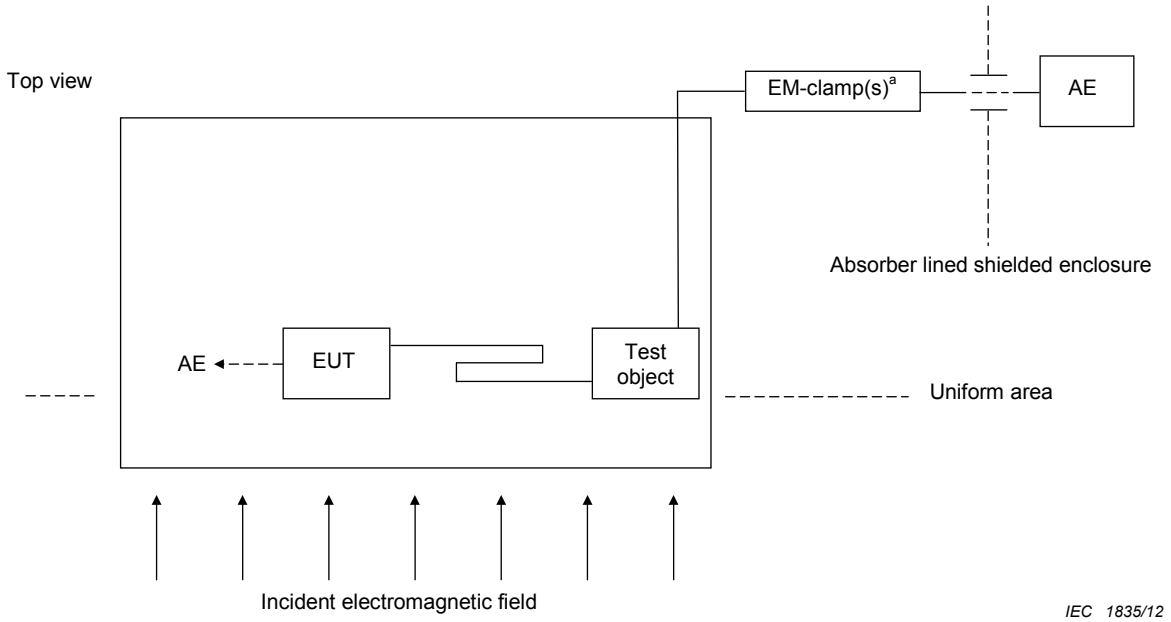

a EM-clamp(s) (if necessary).

Figure 101 – Test set-up for portable test, measuring and monitoring equipment based on IEC 61000-4-3

Auxiliary equipment (AE) required for generating or monitoring the test object signal shall be connected according to Figure 101 via EM-clamps if necessary as described in IEC 61000-4-6, Figure A.3.

Voltage measurements shall be made with a 1 000 Ω ±100 Ω resistor (test object) connected in series with one of the test leads as shown in Figure 102.

For other measurements, the test object shall be specified by the manufacturer and documented in the test report.

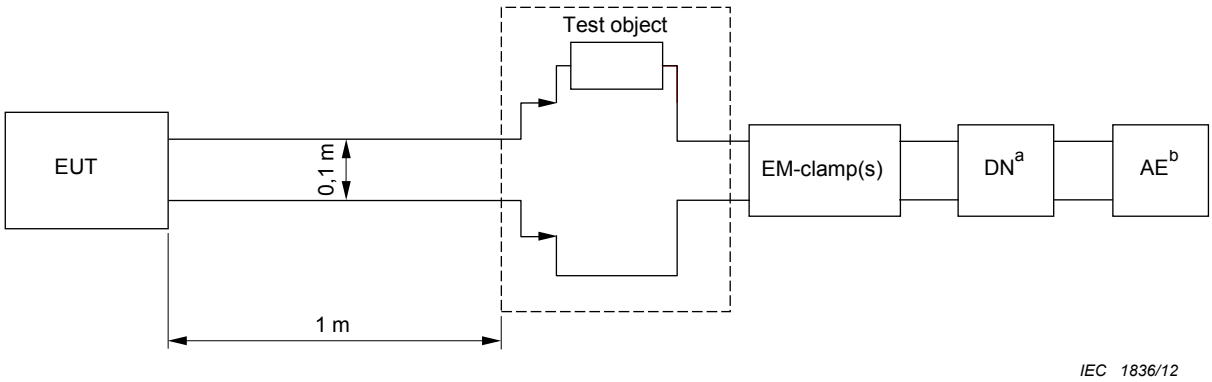

a Decoupling network (if necessary).

b For example, voltage source.

Figure 102 – Example of connection details for voltage measurements

Current measurements shall be made with a 100 Ω ±10 Ω resistor (test object) connected in parallel with the test leads as shown in Figure 103.

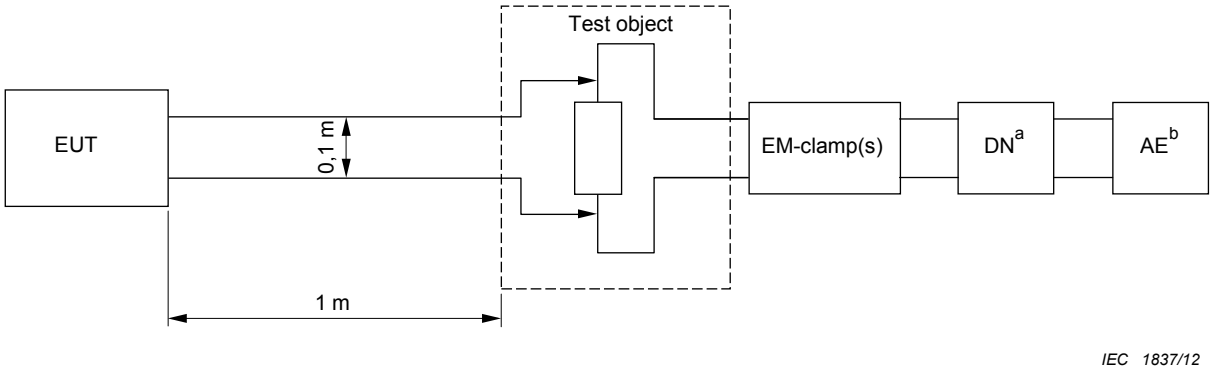

[a] Decoupling network (if necessary).

[b] For example, current source.

Figure 103 – Example of connection details for current measurements

5.3 Operation conditions of EUT during testing

Subclause 5.3 of IEC 61326-1 applies, except as follows:

Addition:

5.3.101 Operational conditions

Test and measurement equipment shall be set to the most sensitive ranges or combination of ranges unless other ranges are known to provide worst-case immunity results within normal application. Each function of multifunctional equipment shall be tested separately.

5.4 Specification of functional performance

Subclause 5.4 of IEC 61326-1 applies.

5.5 Test description

Subclause 5.5 of IEC 61326-1 applies.

6 Immunity requirements

6.1 Conditions during the tests

Subclause 6.1 of IEC 61326-1 applies.

6.2 Immunity test requirements

Subclause 6.2 of IEC 61326-1 is replaced by the following:

Table A.1 of IEC 61326-1 gives the immunity requirements for equipment covered by the scope of this part.

Addition:

6.2.101 Electromagnetic field

If the maximum dimension of the equipment enclosure is <0,3 m, the test is performed from only one side in accordance with Figure 101 and noted in the test report.

6.3 Random aspects

Subclause 6.3 of IEC 61326-1 applies.

6.4 Performance criteria

Subclause 6.4 of IEC 61326-1 applies, except as follows:

Replacement for 6.4.2 of IEC 61326-1:

6.4.2.101 Performance criterion A

During testing, normal performance within the specification limits. This includes that variations are allowed outside the maximum intrinsic error documented in the technical data of the instructions for use. The variations shall be limited to five times the intrinsic error but not more than ±20 % of the measured value when measured at between 50 % and 100 % of full scale.

7 Emission requirements

Clause 7 of IEC 61326-1 applies.

8 Test results and test report

Clause 8 of IEC 61326-1 applies.

9 Instructions for use

Clause 9 of IEC 61326-1 applies.