IEC 62047-20

Edition 1.0 2014-06

INTERNATIONAL STANDARD

NORME INTERNATIONALE

colour inside

Semiconductor devices – Micro-electromechanical devices – Part 20: Gyroscopes

Dispositifs à semiconducteurs – Dispositifs microélectromécaniques – Partie 20: Gyroscopes

IEC 62047-20:2014-06(en-fr)

IEC Central Office
3, rue de Varembé
CH-1211 Geneva 20
Switzerland

Tel.: +41 22 919 02 11
Fax: +41 22 919 03 00
info@iec.ch
www.iec.ch

About the IEC
The International Electrotechnical Commission (IEC) is the leading global organization that prepares and publishes International Standards for all electrical, electronic and related technologies.

About IEC publications
The technical content of IEC publications is kept under constant review by the IEC. Please make sure that you have the latest edition, a corrigenda or an amendment might have been published.

IEC Catalogue - webstore.iec.ch/catalogue
The stand-alone application for consulting the entire bibliographical information on IEC International Standards, Technical Specifications, Technical Reports and other documents. Available for PC, Mac OS, Android Tablets and iPad.

IEC publications search - www.iec.ch/searchpub
The advanced search enables to find IEC publications by a variety of criteria (reference number, text, technical committee,…). It also gives information on projects, replaced and withdrawn publications.

IEC Just Published - webstore.iec.ch/justpublished
Stay up to date on all new IEC publications. Just Published details all new publications released. Available online and also once a month by email.

Electropedia - www.electropedia.org
The world's leading online dictionary of electronic and electrical terms, containing more than 30 000 terms and definitions in English and French, with equivalent terms in 14 additional languages. Also known as the International Electrotechnical Vocabulary (IEV) online.

IEC Glossary - std.iec.ch/glossary
More than 55 000 electrotechnical terminology entries in English and French extracted from the Terms and Definitions clause of IEC publications issued since 2002. Some entries have been collected from earlier publications of IEC TC 37, 77, 86 and CISPR.

IEC Customer Service Centre - webstore.iec.ch/csc
If you wish to give us your feedback on this publication or need further assistance, please contact the Customer Service Centre: csc@iec.ch.

A propos de l'IEC
La Commission Electrotechnique Internationale (IEC) est la première organisation mondiale qui élabore et publie des Normes internationales pour tout ce qui a trait à l'électricité, à l'électronique et aux technologies apparentées.

A propos des publications IEC
Le contenu technique des publications IEC est constamment revu. Veuillez vous assurer que vous possédez l'édition la plus récente, un corrigendum ou amendement peut avoir été publié.

Catalogue IEC - webstore.iec.ch/catalogue
Application autonome pour consulter tous les renseignements bibliographiques sur les Normes internationales, Spécifications techniques, Rapports techniques et autres documents de l'IEC. Disponible pour PC, Mac OS, tablettes Android et iPad.

Recherche de publications IEC - www.iec.ch/searchpub
La recherche avancée permet de trouver des publications IEC en utilisant différents critères (numéro de référence, texte, comité d'études,…). Elle donne aussi des informations sur les projets et les publications remplacées ou retirées.

IEC Just Published - webstore.iec.ch/justpublished
Restez informé sur les nouvelles publications IEC. Just Published détaille les nouvelles publications parues. Disponible en ligne et aussi une fois par mois par email.

Electropedia - www.electropedia.org
Le premier dictionnaire en ligne de termes électroniques et électriques. Il contient plus de 30 000 termes et définitions en anglais et en français, ainsi que les termes équivalents dans 14 langues additionnelles. Egalement appelé Vocabulaire Electrotechnique International (IEV) en ligne.

Glossaire IEC - std.iec.ch/glossary
Plus de 55 000 entrées terminologiques électrotechniques, en anglais et en français, extraites des articles Termes et Définitions des publications IEC parues depuis 2002. Plus certaines entrées antérieures extraites des publications des CE 37, 77, 86 et CISPR de l'IEC.

Service Clients - webstore.iec.ch/csc
Si vous désirez nous donner des commentaires sur cette publication ou si vous avez des questions contactez-nous: csc@iec.ch.

IEC 62047-20

Edition 1.0 2014-06

INTERNATIONAL STANDARD

NORME INTERNATIONALE

colour inside

Semiconductor devices – Micro-electromechanical devices – Part 20: Gyroscopes

Dispositifs à semiconducteurs – Dispositifs microélectromécaniques – Partie 20: Gyroscopes

INTERNATIONAL
ELECTROTECHNICAL
COMMISSION

COMMISSION
ELECTROTECHNIQUE
INTERNATIONALE

PRICE CODE
CODE PRIX XA

ICS 31.080.99

ISBN 978-2-8322-1667-5

Warning! Make sure that you obtained this publication from an authorized distributor.
Attention! Veuillez vous assurer que vous avez obtenu cette publication via un distributeur agréé.

CONTENTS

INTERNATIONAL ELECTROTECHNICAL COMMISSION

SEMICONDUCTOR DEVICES – MICRO-ELECTROMECHANICAL DEVICES –

Part 20: Gyroscopes

FOREWORD

1) The International Electrotechnical Commission (IEC) is a worldwide organization for standardization comprising all national electrotechnical committees (IEC National Committees). The object of IEC is to promote international co-operation on all questions concerning standardization in the electrical and electronic fields. To this end and in addition to other activities, IEC publishes International Standards, Technical Specifications, Technical Reports, Publicly Available Specifications (PAS) and Guides (hereafter referred to as "IEC Publication(s)"). Their preparation is entrusted to technical committees; any IEC National Committee interested in the subject dealt with may participate in this preparatory work. International, governmental and non-governmental organizations liaising with the IEC also participate in this preparation. IEC collaborates closely with the International Organization for Standardization (ISO) in accordance with conditions determined by agreement between the two organizations.

2) The formal decisions or agreements of IEC on technical matters express, as nearly as possible, an international consensus of opinion on the relevant subjects since each technical committee has representation from all interested IEC National Committees.

3) IEC Publications have the form of recommendations for international use and are accepted by IEC National Committees in that sense. While all reasonable efforts are made to ensure that the technical content of IEC Publications is accurate, IEC cannot be held responsible for the way in which they are used or for any misinterpretation by any end user.

4) In order to promote international uniformity, IEC National Committees undertake to apply IEC Publications transparently to the maximum extent possible in their national and regional publications. Any divergence between any IEC Publication and the corresponding national or regional publication shall be clearly indicated in the latter.

5) IEC itself does not provide any attestation of conformity. Independent certification bodies provide conformity assessment services and, in some areas, access to IEC marks of conformity. IEC is not responsible for any services carried out by independent certification bodies.

6) All users should ensure that they have the latest edition of this publication.

7) No liability shall attach to IEC or its directors, employees, servants or agents including individual experts and members of its technical committees and IEC National Committees for any personal injury, property damage or other damage of any nature whatsoever, whether direct or indirect, or for costs (including legal fees) and expenses arising out of the publication, use of, or reliance upon, this IEC Publication or any other IEC Publications.

8) Attention is drawn to the Normative references cited in this publication. Use of the referenced publications is indispensable for the correct application of this publication.

9) Attention is drawn to the possibility that some of the elements of this IEC Publication may be the subject of patent rights. IEC shall not be held responsible for identifying any or all such patent rights.

International Standard IEC 62047-20 has been prepared by subcommittee 47F: Micro-electromechanical systems, of IEC 47: Semiconductor devices.

The text of this standard is based on the following documents:

FDIS	Report on voting
47F/188/FDIS	47F/191/RVD

Full information on the voting for the approval of this standard can be found in the report on voting indicated in the above table.

This publication has been drafted in accordance with the ISO/IEC Directives, Part 2.

A list of all parts in the IEC 62047 series, published under the general title *Semiconductor devices – Micro-electromechanical devices*, can be found on the IEC website.

The committee has decided that the contents of this publication will remain unchanged until the stability date indicated on the IEC web site under "http://webstore.iec.ch" in the data related to the specific publication. At this date, the publication will be

- reconfirmed,
- withdrawn,
- replaced by a revised edition, or
- amended.

IMPORTANT – The 'colour inside' logo on the cover page of this publication indicates that it contains colours which are considered to be useful for the correct understanding of its contents. Users should therefore print this document using a colour printer.

SEMICONDUCTOR DEVICES – MICRO-ELECTROMECHANICAL DEVICES –

Part 20: Gyroscopes

1 Scope

This part of IEC 62047 specifies terms and definitions, ratings and characteristics, and measuring methods of gyroscopes.

Gyroscopes are primarily used for consumer, general industries and aerospace applications. MEMS and semiconductor lasers are widely used for device technology of gyroscopes.

Hereafter, gyroscope is referred to as gyro.

2 Normative references

The following documents, in whole or in part, are normatively referenced in this document and are indispensable for its application. For dated references, only the edition cited applies. For undated references, the latest edition of the referenced document (including any amendments) applies.

None

3 Terms and definitions

For the purposes of this document, the following terms and definitions apply.

3.1
rotating table
rate table
rotating tool on which a gyro is loaded during measurement

3.2
earth rate
angular rate generated in inertial space due to the rotation of the earth

Note 1 to entry: When the angular rate in inertial space is defined as stellar day 23 hours, 56 minutes, a reference of 4,098 903 691 seconds is obtained as specified by the International Earth Rotation and Reference Systems Service (IERS) and therefore, the angular rate of Earth in inertial space is approximately 15,04 °/h. For details of the definition, refer to the IERS website (http://www.iers.org).

3.3
scale factor
ratio of gyro output voltage or output digital signal versus the rotating angular rate being applied, described in unit: V/(°/s) or bit/(°/s)

4 Essential ratings and characteristics

4.1 Categorization of gyro

Table 1 shows uses of gyro categorized by application fields.

Table 1 – Categories of gyro

Category	Contents
1	primarily for consumer use where variations of bias are not specified
2	primarily for industrial use where designing with appropriate range of values of variations of bias
3	primarily for aerospace use where designing with detectable function of the earth rate

4.2 Absolute maximum ratings

Table 2 describes absolute maximum ratings of gyro.

The following items listed in the table shall be described in the specification, unless otherwise stated in the relevant procurement specifications. Stresses over these limits can be one of the causes of permanent damage to the devices.

Table 2 – Absolute maximum ratings

Item no	Absolute maximum ratings	Category			Specification			Unit	Remarks
		1	2	3	min	typ	max		
4.2.1	Storage temperature range	x	x	x	x		x	°C	
4.2.2	Operating temperature range	x	x	x	x		x	°C	
4.2.3	Storage humidity range							%	Moisture absorption management level (for example, see levels specified in Table 5-1 "Moisture Sensitivity Levels" of page 7 in IPC/JEDEC J-STD-020C, [1][1]) for reflow soldering shall be specified. Those descriptions shall not be provided to devices applied with no reflow soldering process and/or hermetic seal packaging process.
4.2.4	Mechanical shock in operating state	x	x	x			x	m/s^2	Maximum limiting value of mechanical shock which does not cause permanent damage to devices under an appropriate operating state. Acceleration, times and wave forms shall be specified.
4.2.5	Mechanical shock in non operating state	x	x	x			x	m/s^2	Maximum limiting value of mechanical shock which does not cause permanent damage to devices under an appropriate non-operating state. Acceleration, times and wave forms shall be specified.
4.2.6	Mechanical vibration in operating state	x	x	x			x	m/s^2	Maximum limiting value of mechanical vibration acceleration and frequency which does not cause permanent damage to devices under an appropriate operating state.
4.2.7	Mechanical vibration in non operating state	x	x	x			x	m/s^2	Maximum limiting value of mechanical vibration acceleration and frequency which does not cause permanent damage to devices under an appropriate non-operating state.
4.2.8	Angular rate limit	x	x	x			x	°/s	Maximum limiting value of angular rate which does not cause permanent damage to devices under an appropriate operating state.

[1] Numbers in square brackets refer to the Bibliography.

Item no	Absolute maximum ratings	Category			Specification			Unit	Remarks
		1	2	3	min	typ	max		
4.2.9	Angular acceleration limit	x	x	x			x	°/s^2	Maximum limiting value of angular acceleration which does not cause permanent damage to devices under an appropriate operating state.
4.2.10	Maximum supply voltage	x	x	x			x	V	Maximum limiting value of supply voltage which does not cause permanent damage to devices.
4.2.11	Maximum supply current						x	A	Maximum limiting value of supply current which does not cause permanent damage to devices. This limiting value shall be specified only for a kind of constant current driving devices.
NOTE x: mandatory, blank: optional									

4.3 Normal operating rating

Table 3 describes normal operating ratings of gyro.

The following items should be described in the specification, unless otherwise stated in the relevant procurement specifications. These conditions are recommended to keep specified characteristics in stable state during operations of applying devices.

Table 3 – Normal operating ratings

Item no.	Normal operating ratings	Category			Specification			Unit	Remarks
		1	2	3	min	typ	max		
4.3.1	Guarantee operating temperature range	x	x	x	x		x	°C	
4.3.2	Guarantee operating humidity range	x	x	x			x	%	
4.3.3	Supply voltage range	x	x	x	x	x	x	V	
4.3.4	Current consumption	x	x	x			x	A	
4.3.5	Start up current			x			x	A	
4.3.6	Power supply ripple requirement			x			x	Vpp	
4.3.7	Other environmental condition				x		x		Recommended ranges of appropriate indexes of environmental conditions (such as conditions of electromagnetic environments, air pressure) specified as a specified minimum value to maximum value.
4.3.8	Overload recovering time			x			x	s	Maximum value of overload recovering time in the range of measurement less than maximum rating.
NOTE x: mandatory, blank: optional									

4.4 Characteristics

Table 4 describes characteristics of gyro.

Table 4 – Characteristics

Item no	Characteristics	Category			Specification			Unit	Remarks
		1	2	3	min	typ	max		
4.4.1	Measurement range	x	x	x			x	°/s	Angular rate measuring range for guarantee of performance
4.4.2	Nominal scale factor	x	x	x		x		V/(°/s) or bit/(°/s)	Nominal scale factor is also called as standard sensitivity.
4.4.3	Initial scale factor variation		x	x	x		x	%	Minimum and maximum value of variation from standard sensitivity at a specified temperature
4.4.4	Scale factor variation with temperature or Temperature coefficient of scale factor		x	x	x		x	%	Minimum and maximum value of standard sensitivity under a specified variation in temperature
4.4.5	Ratiometric error for scale factor			x			x	%	Maximum value of error of sensitivity applying voltage fluctuation caused by operating instability of applying electric power supply
4.4.6	Linearity						x	%	
4.4.7	Scale factor stability	n		x		x			A typical value of stability of sensitivity under a specified definite input voltage value
4.4.8	Scale factor symmetry	n		x		x			A typical value of asymmetry of sensitivity defined as a ratio of the sensitivity applying plus value of a specified input voltage to minus value of a specified input voltage, see 5.1.3.8.
4.4.9	Cross axis sensitivity			x			x	%	Maximum value of sensitivity of cross axis (see 5.2.3 Principle of measurement).
4.4.10	Nominal bias	x	x	x		x		V or bit	Typical value of bias voltage or bit value under an appropriate applying input voltage value
4.4.11	Initial bias variation			x	x		x	°/s	Minimum and maximum value of bias under a specified temperature
4.4.12	Bias variation with temperature or Temperature coefficient of bias			x	x		x	°/s	Minimum and maximum value of standard bias under a specified variation in temperature
4.4.13	Ratiometric error for bias			x			x	V	Maximum value of error of bias applying voltage fluctuation caused by operating instability of applying electric power supply. No description is required for digital output case.
4.4.14	Bias repeatability (switch on to switch off)			x	x		x	°/s	Minimum value and maximum value of bias fluctuation of each period during a switching on state to a switching off state
4.4.15	Bias hysteresis			x			x	°/s	Maximum value of hysteresis of bias under a specified variation in temperature
4.4.16	Linear g sensitivity			x			x		Maximum value of changed bias value under operating conditions of a specified constant acceleration value, expressed in comparison with *g*((°/s)/*g*)

Item no	Characteristics	Category			Specification			Unit	Remarks
		1	2	3	min	typ	max		
4.4.17	Bias drift after power on			x			x	°/s	Maximum value of drift of bias during turned on state of applying electric power supply
4.4.18	In-band noise			x			x	°/s	In-band output noise at stable state operation, described with RMS
4.4.19	Broadband noise			x			x	°/s	Broadband output noise at stable state operation, described with RMS
4.4.20	Angular random walk			x			x	°/√h or (°/h)/√Hz	Output variation of gyroscope due to noise, described with RMS
4.4.21	Bias instability			x			x	°/s	Described with RMS
4.4.22	Start up time			x			x	s	Time required for the gyro output to reach the specified output after power on
4.4.23	Frequency band	x	x	x	x			Hz	Frequency response characteristics
4.4.24	Gain peak						x	dB	Maximum value of gain of frequency characteristics under a specified frequency. Describe with a specified value of the frequency (Hz).
4.4.25	Resolution			x	x			°/s	Detectable minimum change in the input angular rate
NOTE x: mandatory, blank: optional, n: unnecessary									

5 Measuring methods

5.1 Scale factor

5.1.1 Purpose

To specify measuring method relating to scale factor in gyro.

5.1.2 Measuring circuit (circuit diagram)

Figure 1 shows an example of composition of the sensitivity measuring circuit and Figure 2 shows an example of wiring configuration. The measuring circuit is composed of the gyro to be measured and the devices listed below. Components to apply in the measuring circuit shall satisfy the points described below.

– Temperature controlled chamber: This should be capable of maintaining the gyro at a specified ambient temperature. Furthermore, the temperature control range should be wider than the operating temperature range of gyro.

– Temperature sensor: This should be capable of measuring the temperature in the temperature controlled chamber. A temperature sensor provided in advance in the temperature controlled chamber can be used.

– Power supply for gyro: This should be capable of supplying the voltage and current required by gyro. The fluctuating range for ripple voltage on the output should meet the gyro requirements in the supplying state.

– Data acquisition system: Measuring device or measuring system adjusted to the output configuration of gyro. For example, a digital multimeter or data logger is used if gyro output is analogue voltage.

– Rotating table control device: Control device which controls the input angular rate given to the rating table. This table is given an angular rate of rotation that is not less than the detection range of gyro, and that is capable of accommodating changes in the angular rate corresponding to the minimum resolution. See Annex A for measurement accuracy of the rotating table.

– Measuring system controller: An overall system for automatic control of the power supply, gyro, data acquisition system and rotating table control device. This is not required for manual operation.

– Slip ring: It should be noted that the slip ring can be a source of noise generation.

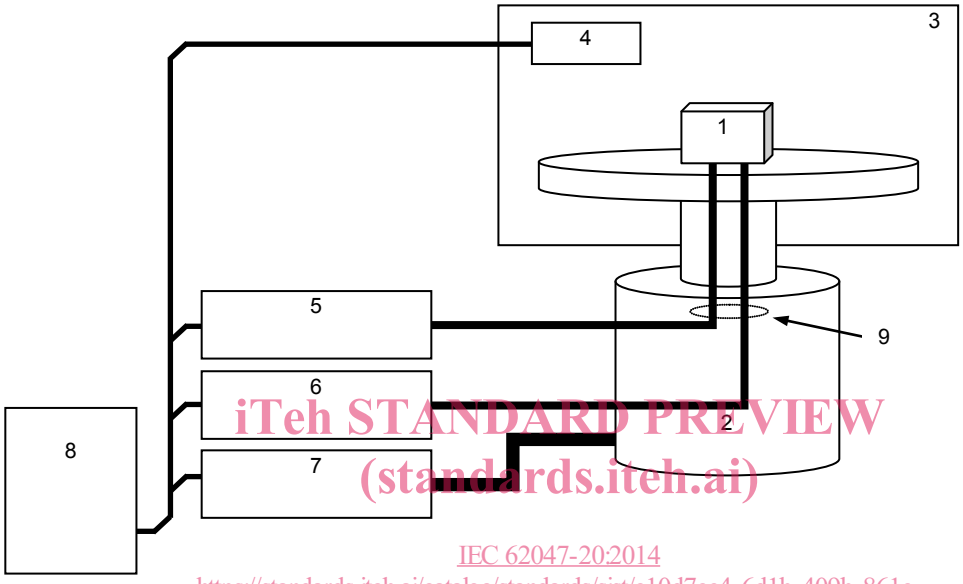

Key

1	DUT, a piece of gyro
2	rate table
3	temperature controlled chamber, to keep a specified temperature value of DUT
4	temperature sensor, to monitor environmental temperature in a chamber
5	power supply to operate DUT
6	data logger, to obtain data during the measurement
7	controller for rate table, to set up a specified rotating condition of the rate table
8	control system, to control the measuring circuit during the measurement
9	slip ring

Figure 1 – Example of measuring circuit

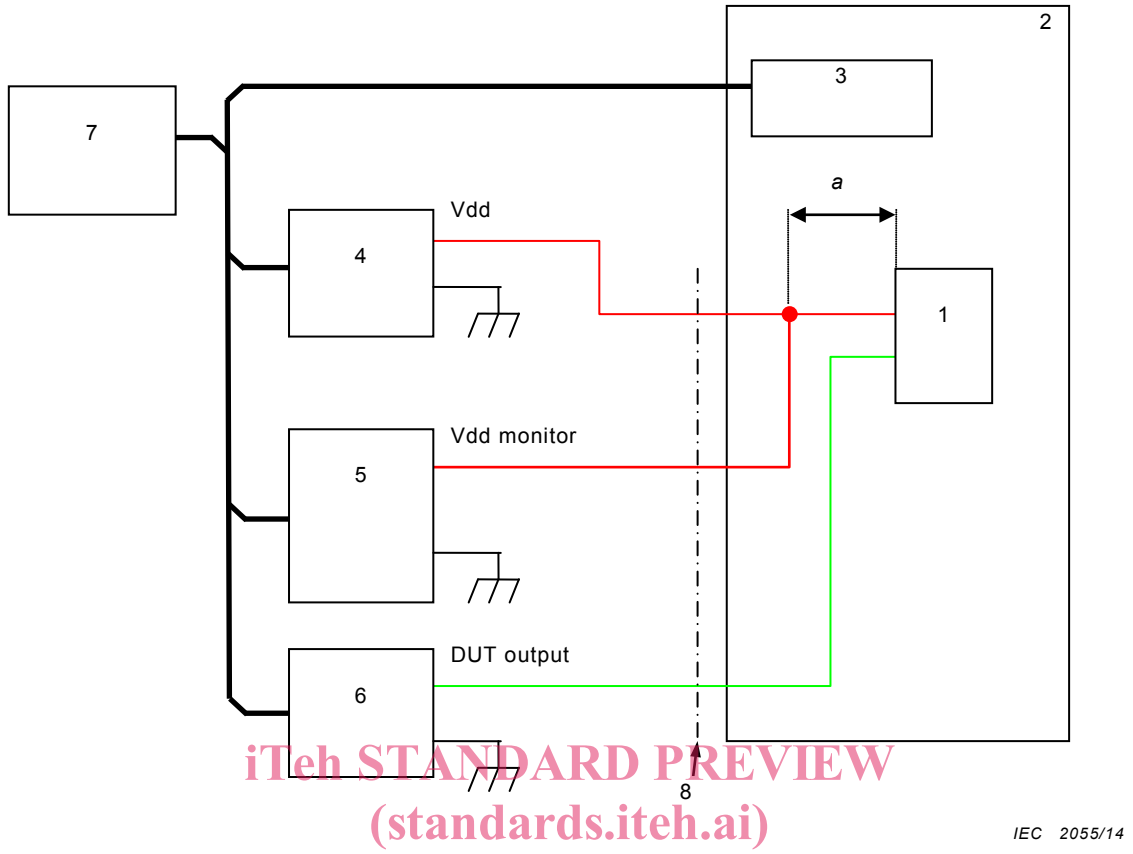

Key

1	DUT, a piece of gyro
2	temperature controlled chamber, to keep a specified temperature value of DUT
3	thermometer, to monitor environmental temperature in a chamber
4	power supply, to supply electric power to operate DUT
5	monitor for power supply
6	data logger, to obtain data during the measurement
7	control system
8	slip ring position (when slip ring used)
a	length from power supply feedback position to gyro supply terminal position (the length of wiring should preferably be as short as possible)
Vdd	voltage of power supply
Vdd Monitor	
DUT output	output of DUT (gyro)

Figure 2 – Example of wiring configuration

5.1.3 Measuring principle

5.1.3.1 Scale factor

In the measuring circuit shown in Figure 1, while gyro is under conditions of a specified measuring temperature T_{BASE} (specified temperature provided as a medium value between a specified minimum operating temperature and maximum operating temperature, see Figure 4) and a specified supply voltage V_{BASE}, rotating angular rate of x_1, x_2, ---, x_{2n+1}, which divides lower and higher half detection range of gyro into n-distribution such as x_1, x_2, ---, x_n (preferably $n \geq 5$) are applied, and corresponding output values of signal of y_1, y_2, ---, y_{2n+1} measured in unit of V/(°/s) or bit/(°/s) of this detection input angular rate.

Furthermore, although the manufacturer can specify the value of n, it can be changed as necessary based on specifications agreed between a manufacturer and its user.

Figure 3 shows an example of the measurement data. Abbreviated symbols of CCW and CW in the figure show the left rotation (counter clockwise) and right rotation (clockwise), respectively. (In Figure 3, it is equally divided by n = 5 and a total of 11 points of data are shown including the stationary state). A scale factor is obtained by calculations from these points. However, since acquired data are not on a straight line as represented by Figure 3, a straight line on which the sum of squares becomes minimum is obtained by calculation (this straight line is referred to hereafter as the best fit line).

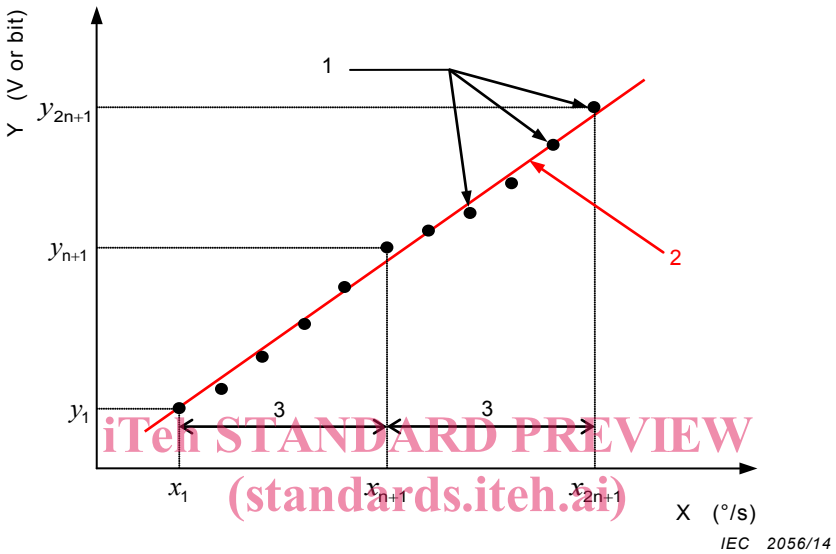

Key	
1	points of measurement data at the applied angular rate value
2	best fit line
3	divided in specified intervals of "n"
X	x-axis, input angular rate in unit of °/s
x_1	CCW maximum detection
x_{n+1}	stationary state
x_{2n+1}	CW maximum detection input angular rate
Y	y-axis, gyro output signal in unit of V or bit
y_1	CCW side maximum output value
y_{n+1}	output value at stationary state
y_{2n+1}	CW side maximum output value

Figure 3 – Example of measurement data when the angular rate is applied

Here, the gyro output value at each measuring point is represented by "y_i" and the angular rate to be input to gyro is represented by "x_i". Constants of the best fit line "$y = a_{BASE} \times x + b_{BASE}$" are then obtained as follows:

$$a_{BASE} = \frac{(2n+1)\sum_{i=1}^{2n+1} x_i y_i - \sum_{i=1}^{2n+1} x_i \sum_{i=1}^{2n+1} y_i}{(2n+1)\sum_{i=1}^{2n+1} x_i^2 - \left(\sum_{i=1}^{2n+1} x_i\right)^2} \quad (1)$$