INTERNATIONAL STANDARD

ISO 6753-2

First edition
1998-05-15

Tools for pressing and moulding — Machined plates —

Part 2:
Machined plates for moulds

Outillage de presse et de moulage — Plaques usinées —
Partie 2: Plaques usinées pour moules

Foreword

ISO (the International Organization for Standardization) is a worldwide federation of national standards bodies (ISO member bodies). The work of preparing International Standards is normally carried out through ISO technical committees. Each member body interested in a subject for which a technical committee has been established has the right to be represented on that committee. International organizations, governmental and non-governmental, in liaison with ISO, also take part in the work. ISO collaborates closely with the International Electrotechnical Commission (IEC) on all matters of electrotechnical standardization.

Draft International Standards adopted by the technical committees are circulated to the member bodies for voting. Publication as an International Standard requires approval by at least 75 % of the member bodies casting a vote.

International Standard ISO 6753-2 was prepared by Technical Committee ISO/TC 29, *Small tools,* Subcommittee 8, *Tools for pressing and moulding.*

Together with ISO 6753-1, it cancels and replaces ISO 6753:1982, which has been technically revised.

ISO 6753 consists of the following parts, under the general title *Tools for pressing and moulding - Machined plates:*

— *Part 1: Machined plates for press tools, jigs and fixtures*

— *Part 2: Machined plates for moulds*

International Organization for Standardization
Case postale 56 • CH-1211 Genève 20 • Switzerland
Internet central@iso.ch
X.400 c=ch; a=400net; p=iso; o=isocs; s=central

Printed in Switzerland

Tools for pressing and moulding — Machined plates —

Part 2:
Machined plates for moulds

1 Scope

This part of ISO 6753 specifies the dimensions and tolerances, in millimetres, of machined plates for moulds of the following types:

— type A: clamping plates;

— type B: cavity plates;

— type C: intermediate plates;

— type D: ejector plates;

— type E: risers.

It gives guidance relative to materials and hardness and specifies the designation of machined plates in accordance with this part of ISO 6753.

2 Dimensions

2.1 Clamping plates (type A), cavity plates (type B) and intermediate plates (type C)

See figure 1 and table 1.

2.2 Ejector plates (type D) and risers (type E) assigned to the size of plates

See figure 2 and table 2.

2.3 Tolerances, limit deviations and surface roughness

See table 3.

3 Material and corresponding hardness

The material and hardness are left to the manufacturer's discretion.

4 Designation

Machined plates for moulds in accordance with this part of ISO 6753 shall be designated by

a) “machined plate”;

b) reference to this part of ISO 6753, i.e. ISO 6753-2;

c) its type (A, B, C, D or E);

d) its length, l_2, in millimetres (for types A, B or C), or its length l_1, in millimetres (for types D or E);

e) its length, l_1, in millimetres (for types A, B or C), or its width b or b_1, in millimetres (for types D or E);

f) its thickness t_1, t_2 or t_3, in millimetres;

g) its class (I or II).

EXAMPLE 1

The designation for a machined plate of type A of length l_2 = 96 mm, length l_1 = 120 mm, thickness t_1 = 12,5 mm and of class I is as follows:

Machined plate ISO 6753-2 - A - 96 × 120 × 12,5 - I

EXAMPLE 2

The designation for a machined plate of type D of length l_1 = 96 mm, width b = 20 mm, thickness t_3 = 25 mm and of class II is as follows:

Machined plate ISO 6753-2 - D - 96 × 20 × 25 - II

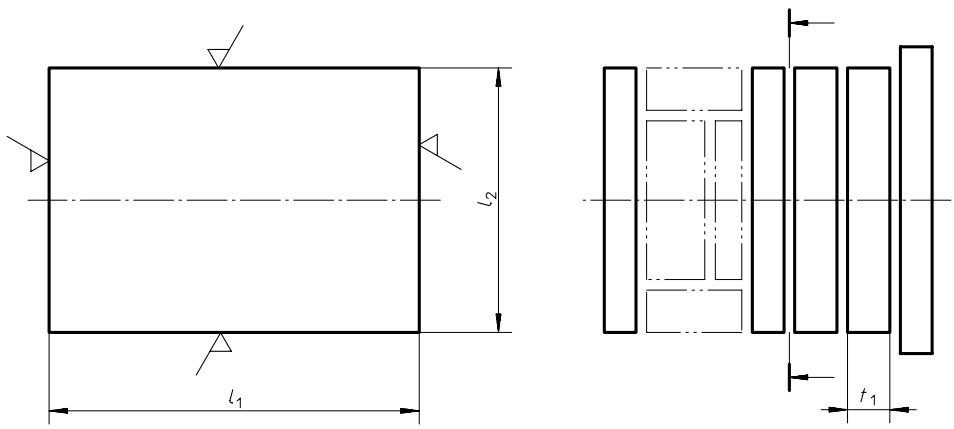

Figure 1 — Clamping, cavity and intermediate plates

Table 1 — Dimensions of clamping, cavity and intermediate plates

Sizes of plates		t_1												
l_2	l_1	12,5	16	20	25	32	40	50	63	80	100	125	160	200
96	× 96	x	x	x	x	x	x	x						
	× 120	x	x	x	x	x	x	x						
120	× 120	x	x	x	x	x	x	x	x					
	× 156	x	x	x	x	x	x	x	x					
156	× 156		x	x	x	x	x	x	x	x	x			
	× 196		x	x	x	x	x	x	x	x	x			
	× 220		x	x	x	x	x	x	x	x	x			
	× 246		x	x	x	x	x	x	x	x	x			
	× 276		x	x	x	x	x	x	x	x	x			
	× 310		x	x	x	x	x	x	x	x	x			
196	× 196			x	x	x	x	x	x	x	x			
	× 220			x	x	x	x	x	x	x	x			
	× 246			x	x	x	x	x	x	x	x			
	× 276			x	x	x	x	x	x	x	x			
	× 310			x	x	x	x	x	x					
	× 350			x	x	x	x	x	x	x	x			
	× 396			x	x	x	x	x	x	x	x			
220	× 220			x	x	x	x	x	x	x	x			
	× 246			x	x	x	x	x	x	x	x			
	× 276			x	x	x	x	x	x	x	x			
	× 310			x	x	x	x	x	x	x	x			
	× 350			x	x	x	x	x	x	x	x			
246	× 246			x	x	x	x	x	x	x	x	x		
	× 276			x	x	x	x	x	x	x	x	x		
	× 310			x	x	x	x	x	x	x	x	x		
	× 350			x	x	x	x	x	x	x	x	x		
	× 396			x	x	x	x	x	x	x	x	x		
	× 446			x	x	x	x	x	x	x	x	x		
	× 496			x	x	x	x	x	x	x	x	x		
276	× 276				x	x	x	x	x	x	x	x		
	× 310				x	x	x	x	x	x	x	x		
	× 350				x	x	x	x	x	x	x			
	× 396				x	x	x	x	x	x	x	x		
	× 446				x	x	x	x	x	x	x	x		
	× 496				x	x	x	x	x	x	x	x		
	× 556				x	x	x	x	x	x	x	x		
310	× 310				x	x	x	x	x	x	x	x		
	× 350				x	x	x	x	x	x	x	x		
	× 396				x	x	x	x	x	x	x	x		
	× 446				x	x	x	x	x	x	x	x		
	× 496				x	x	x	x	x	x	x	x		
	× 556				x	x	x	x	x	x	x	x		
	× 626				x	x	x	x	x	x	x	x		

Sizes of plates		t_1												
l_2	l_1	12,5	16	20	25	32	40	50	63	80	100	125	160	200
350	× 350				x	x	x	x	x	x	x	x		
	× 396				x	x	x	x	x	x	x	x	x	
	× 446				x	x	x	x	x	x	x	x	x	
	× 496				x	x	x	x	x	x	x	x	x	
	× 556				x	x	x	x	x	x	x	x	x	
	× 626				x	x	x	x	x	x	x	x	x	
	× 706				x	x	x	x	x	x	x	x	x	
396	× 396					x	x	x	x	x	x	x	x	
	× 446					x	x	x	x	x	x	x	x	
	× 496					x	x	x	x	x	x	x	x	
	× 556					x	x	x	x	x	x	x	x	
	× 626					x	x	x	x	x	x	x	x	
	× 706					x	x	x	x	x	x	x	x	
	× 796					x	x	x	x	x	x	x	x	
446	× 446					x	x	x	x	x	x	x		
	× 496					x	x	x	x	x	x	x	x	
	× 556					x	x	x	x	x	x	x	x	
	× 626					x	x	x	x	x	x	x	x	
	× 706					x	x	x	x	x	x	x	x	
	× 796					x	x	x	x	x	x	x	x	
	× 896					x	x	x	x	x	x	x	x	
496	× 496						x	x	x	x	x	x	x	x
	× 556						x	x	x	x	x	x	x	x
	× 626						x	x	x	x	x	x	x	x
	× 706						x	x	x	x	x	x	x	x
	× 796						x	x	x	x	x	x	x	x
	× 896						x	x	x	x	x	x	x	x
	× 996						x	x	x	x	x	x	x	x
556	× 556						x	x	x	x	x	x	x	x
	× 626						x	x	x	x	x	x	x	x
	× 706						x	x	x	x	x	x	x	x
	× 796						x	x	x	x	x	x	x	
	× 896						x	x	x	x	x	x	x	x
	× 996						x	x	x	x	x	x	x	x
	× 1.116						x	x	x	x	x	x	x	x
626	× 626							x	x	x	x	x	x	x
	× 706							x	x	x	x	x	x	x
	× 796							x	x	x	x	x	x	x
	× 896							x	x	x	x	x	x	x
	× 996							x	x	x	x	x	x	x
	× 1.116							x	x	x	x	x	x	x
706	× 706							x	x	x	x	x	x	x
	× 796							x	x	x	x	x	x	x
	× 896							x	x	x	x	x	x	x
	× 996							x	x	x	x	x	x	x
	× 1.116							x	x	x	x	x	x	x
796	× 796							x	x	x	x	x	x	x
	× 896							x	x	x	x	x	x	x
	× 996							x	x	x	x	x	x	x
	× 1.116							x	x	x	x	x	x	x
896	× 896							x	x	x	x	x	x	x
	× 996							x	x	x	x	x	x	x
	× 1.116							x	x	x	x	x	x	x

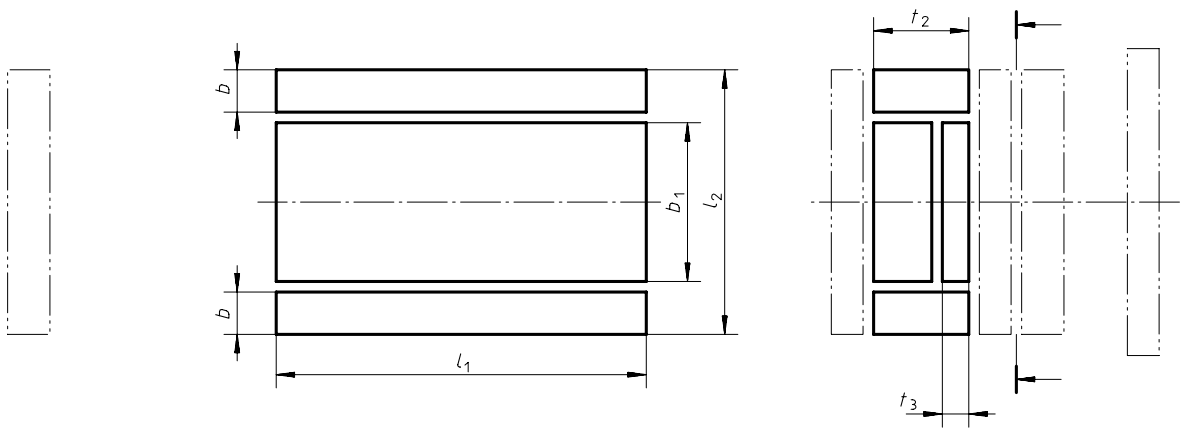

Figure 2 — Ejector plates and risers

Table 2 — Dimensions of ejector plates and risers

Sizes of plates		Risers											Ejector plates									
		Outside dimensions		Thickness, t_2											t_3							
$l_2 \times l_1$		$l_1 \times b$		25	32	40	50	63	80	100	125	160	$l_1 \times b_1$		8	10	12,5	16	20	25	32	40	50
96	× 96	96 ×	20	x	x	x						96	×	54	x	x							
	× 120	120 ×		x	x	x	x						120 ×		x	x							
120	× 120	120 ×	26		x	x	x	x					120 ×	66	x	x							
	× 156	156 ×			x	x	x	x					156 ×		x	x							
156	× 156	156 ×	33			x	x	x	x				156 ×	88		x		x					
	× 196	196 ×				x	x	x	x				196 ×			x		x					
	× 220	220 ×				x	x	x	x				220 ×			x		x					
	× 246	246 ×				x	x	x	x				246 ×			x		x					
	× 276	276 ×				x	x	x	x				276 ×				x	x					
	× 310	310 ×				x	x	x	x				310 ×				x	x					
196	× 196	196 ×	40				x	x	x	x			196 ×	114			x	x					
	× 220	220 ×					x	x	x	x			220 ×				x	x					
	× 246	246 ×					x	x	x	x			246 ×				x	x					
	× 276	276 ×					x	x	x	x			276 ×				x	x					
	× 310	310 ×					x	x	x	x			310 ×				x	x					
	× 350	350 ×					x	x	x	x			350 ×				x	x					
	× 396	396 ×					x	x	x	x			396 ×				x		x				
	× 246	246 ×					x	x	x	x			246 ×				x	x					
	× 276	276 ×					x	x	x	x			276 ×				x	x					
	× 310	310 ×					x	x	x	x			310 ×				x	x					
	× 350	350 ×					x	x	x	x			350 ×				x		x				

Sizes of plates		Risers											Ejector plates									
		Outside dimensions		Thickness, t_2									Outside dimensions		Thickness, t_3							
$l_2 \times l_1$		$l_1 \times b$		25	32	40	50	63	80	100	125	160	$l_1 \times b$		8	10	12,5	16	20	25	32	40	50
246	× 246	246 ×	47				x	x	x	x			246 ×	150			x	x					
	× 276	276 ×					x	x	x	x			276 ×				x	x					
	× 310	310 ×					x	x	x	x			310 ×				x	x					
	× 350	350 ×					x	x	x	x			350 ×					x	x				
	× 396	396 ×					x	x	x	x			396 ×					x	x				
	× 446	446 ×					x	x	x	x			446 ×					x	x				
	× 496	496 ×					x	x	x	x			496 ×					x	x				
276	× 276	276 ×	47					x	x	x	x		276 ×	180			x	x					
	× 310	310 ×						x	x	x	x		310 ×					x	x				
	× 350	350 ×						x	x	x	x		350 ×					x	x				
	× 396	396 ×						x	x	x	x		396 ×					x	x				
	× 446	446 ×						x	x	x	x		446 ×					x	x				
	× 496	496 ×						x	x	x	x		496 ×					x	x				
	× 556	556 ×						x	x	x	x		556 ×					x	x				
310	× 310	310 ×	47					x	x	x	x		310 ×	214				x	x				
	× 350	350 ×						x	x	x	x		350 ×					x	x				
	× 396	396 ×						x	x	x	x		396 ×					x	x				
	× 446	446 ×						x	x	x	x		446 ×						x	x			
	× 496	496 ×						x	x	x	x		496 ×						x	x			
	× 556	556 ×						x	x	x	x		556 ×						x	x			
	× 626	626 ×						x	x	x	x		626 ×						x	x			
350	× 350	350 ×	47					x	x	x	x		350 ×	252				x	x				
	× 396	396 ×						x	x	x	x		396 ×					x	x				
	× 446	446 ×						x	x	x		446	×					x	x				
	× 496	496 ×						x	x	x	x		496 ×					x	x				
	× 556	556 ×						x	x	x	x		556 ×						x	x			
	× 626	626 ×						x	x		x		626 ×						x	x			
	× 706	706 ×						x	x	x	x		706 ×						x	x			
396	× 396	396 ×	60					x	x	x	x		396 ×	272				x	x				
	× 446	446 ×						x	x	x	x		446 ×					x	x				
	× 496	496 ×						x	x	x	x		496 ×						x	x			
	× 556	556 ×						x	x	x	x		556 ×						x	x			
	× 626	626 ×						x	x	x	x		626 ×						x	x			
	× 706	706 ×						x	x	x	x		706 ×							x	x		
	× 796	796 ×						x	x	x	x		796 ×							x	x		
446	× 446	446 ×	60					x	x	x	x		446 ×	322					x	x			
	× 496	496 ×						x	x		x		496 ×						x	x			
	× 556	556 ×						x	x	x	x		556 ×						x	x			
	× 626	626 ×							x	x	x		626 ×							x	x		
	× 706	706 ×							x	x	x		706 ×							x	x		
	× 796	796 ×							x	x	x		796 ×							x	x		
	× 896	896 ×							x	x	x		896 ×							x	x		
496	× 496	496 ×	60						x	x	x	x	496 ×	372						x	x		
	× 556	556 ×							x	x	x	x	556 ×							x	x		
	× 626	626 ×							x	x	x	x	626 ×							x	x		
	× 706	706 ×							x	x	x	x	706 ×							x	x		
	× 796	796 ×							x	x	x	x	796 ×							x	x		
	× 896	896 ×							x	x	x	x	896 ×							x	x		
	× 996	996 ×							x	x	x	x	996 ×							x	x		

Sizes of plates		Risers										Ejector plates									
		Outside dimensions		Thickness, t_2									Outside dimensions		Thickness, t_3							
$l_2 \times l_1$		$l_1 \times b$		25	32	40	50	63	80	100	125	160	$l_1 \times b_1$		8	10	12,5	16	20	25	32	40	50
556	× 556	556 ×	74						x	x	x	x	556 ×	404						x	x		
	× 626	626 ×							x	x	x	x	626 ×							x	x		
	× 706	706 ×							x	x	x	x	706 ×							x	x		
	× 796	796 ×							x	x	x	x	796 ×							x	x		
	× 896	896 ×							x	x	x	x	896 ×							x	x		
	× 996	996 ×							x	x	x	x	996 ×							x	x		
	×1 116	1 116 ×								x	x	x	1116 ×							x		x	
626	× 626	626 ×	74							x	x	x	626 ×	474						x		x	
	× 706	706 ×								x	x	x	706 ×							x		x	
	× 796	796 ×								x	x	x	796 ×							x		x	
	× 896	896 ×								x	x	x	896 ×							x		x	
	× 996	996 ×								x	x	x	996 ×							x		x	
	×1 116	1 116 ×								x	x	x	1116 ×							x		x	
706	× 706	706 ×	74							x	x	x	706 ×	554						x		x	
	× 796	796 ×								x	x	x	796 ×							x		x	
	× 896	896 ×								x	x	x	896 ×							x		x	
	× 996	996 ×								x	x	x	996 ×							x		x	
	×1 116	1 116 ×								x	x	x	1116 ×							x		x	
796	× 796	796 ×	74								x	x	796 ×	644						x			x
	× 896	896 ×									x	x	896 ×							x			x
	× 996	996 ×									x	x	996 ×							x			
	× 1 116	1 116 ×									x	x	1116 ×							x			x
896	× 896	896 ×	74								x	x	896 ×	744							x		x
	× 996	996 ×									x	x	996 ×								x		x
	× 1 116	1 116 ×									x	x	1116 ×								x		x

Table 3 — Tolerances, limit deviations and surface roughness

Plate	Surface roughness, *Ra*, for l_1, l_2, t_1, t_2, t_3 µm	Limit deviations for l_1, l_2 mm	Limit deviations for t_1, t_2, t_3 mm	Perpendicularity on 100 mm measurement length[1] mm	Parallelism on 100 mm measurement length[1] mm
Class I, for finished plates	0,8	+0,4 +0,2	+0,05 0	0,02	0,02
Class II, for prefinished plates	3,2	+0,4 +0,2	+0,5 +0,3	0,04	0,04

1) These limit deviations apply for 100 mm. For length > 100 mm, the limit deviations shall be multiplied by the values for l_1 or l_2 x 10^{-2}. For example, for a plate l_2 = 556 mm, the limit deviations for parallelism are calculated as follows: (556 x 10^{-2}) x 0,02 (for class I) = 0,11 mm. For length < 100 mm the values given in table 3 apply. They remain unchanged.