INTERNATIONAL STANDARD

ISO 5682-1

Second edition
1996-12-15

Equipment for crop protection — Spraying equipment —

Part 1: Test methods for sprayer nozzles

Matériel de protection des cultures — Équipement de pulvérisation — Partie 1: Méthodes d'essai des buses de pulvérisation

Reference number
ISO 5682-1:1996(E)

Content

International Organization for Standardization
Case Postale 56 • CH-1211 Genève 20 • Switzerland

Printed in Switzerland

Foreword

ISO (the International Organization for Standardization) is a worldwide federation of national standards bodies (ISO member bodies). The work of preparing International Standards is normally carried out through ISO technical committees. Each member body interested in a subject for which a technical committee has been established has the right to be represented on that committee. International organizations, governmental and non-governmental, in liaison with ISO, also take part in the work. ISO collaborates closely with the International Electrotechnical Commission (IEC) on all matters of electrotechnical standardization.

Draft International Standards adopted by the technical committees are circulated to the member bodies for voting. Publication as an International Standard requires approval by at least 75 % of the member bodies casting a vote.

International Standard ISO 5682-1 was prepared by Technical Committee ISO/TC 23, *Tractors and machinery for agriculture and forestry*, Subcommittee SC 6, *Equipment for crop protection*.

This second edition cancels and replaces the first edition (ISO 5682-1:1981), which has been technically revised.

ISO 5682 consists of the following parts, under the general title *Equipment for crop protection — Spraying equipment*:

— *Part 1 : Test methods for sprayer nozzles*

— *Part 2 : Test methods for hydraulic sprayers*

— *Part 3 : Test method for volume/hectare adjustment systems of agricultural hydraulic pressure sprayers*

Annex A forms an integral part of this part of ISO 5682. Annex B is for information only.

This page intentionally left blank

Equipment for crop protection — Spraying equipment —

Part 1:
Test methods for sprayer nozzles

1 Scope

This part of ISO 5682 specifies methods for estimating the accuracy of hydraulic sprayer nozzles for hydraulic spraying.

It applies only to hydraulic energy nozzles of mounted, towed and self-propelled agricultural sprayers used for crop protection and fertilization.

2 Normative reference

The following standard contains provisions which, through reference in this text, constitute provisions of this part of ISO 5682. At the time of publication, the edition indicated was valid. All standards are subject to revision, and parties to agreements based on this part of ISO 5682 are encouraged to investigate the possibility of applying the most recent edition of the standard indicated below. Members of IEC and ISO maintain registers of currently valid International Standards.

ISO 5681:1992, *Equipment for crop protection — Vocabulary.*

3 Definitions

For the purposes of this part of ISO 5682, the definitions given in ISO 5681 apply.

4 Test liquids

4.1 Clean water, free from solids in suspension.

4.2 Clean water with 20 g/l of micro grains of aluminium oxide (according to annex A), renewed after 50 passages.

4.3 Clean water with the addition, if necessary, of a soluble colouring agent, such as dark coloured aniline dye or a similar product. The surface tension of the mixture shall be (35 ± 5) mN/m at 20 °C and the agent and concentration necessary for achieving this shall be stated in the test report.

5 Apparatus

5.1 Equipment

5.1.1 Pressure gauge, with an accuracy of ± 1 % at the effective working pressure.

5.1.2 Rubber or plastics hose for each nozzle.

5.1.3 Collecting vessel for each nozzle.

5.1.4 Measuring tube with dimensions compatible with the requirements of 7.1.3, or **balance,** for measuring the quantity of liquid collected.

5.1.5 Watch, with an accuracy of ± 0,5 s.

5.1.6 Scale, with an accuracy of ± 1 mm.

5.1.7 Angle meter, with an accuracy of ± 0,5°.

5.1.8 Device enabling the nozzles to be moved at a given speed.

5.1.9 Petri dishes, of diameter 50 mm.

5.1.10 Microscope, with a measuring accuracy of 10 µm.

5.1.11 Photographic device with electronic flash.

5.1.12 Liquid or solid suitable for collecting the drops.

5.2 Distribution bench, equipped with a device allowing collection of the liquid when the test pressure is stabilized and the sprayer nozzles are supplied normally (see figure 1 for an example). Components of the bench shall conform to the requirements given in 5.2.1 and 5.2.2.

5.2.1 Groove characteristics

The walls of the grooves shall be vertical.

The upper edges of the walls shall form a plane with, in the longitudinal direction (perpendicular to the grooves), a tolerance of ± 1 % (10 mm/1 m) on the horizontal and, in the lateral direction (parallel with the grooves), a tolerance of ± 2 % (see figure 2).

The maximum thickness of the groove walls shall be 4 mm.

The distance between two consecutive ridges shall be (50 ± 0,5) mm.

The minimum height of the vertical walls of the grooves shall be at least equal to twice the width of the grooves.

In the case of a distribution bench composed of grooves spaced at 25 mm intervals, these conditions apply by comparing two adjacent grooves with one 50 mm groove.

The total width of the distribution bench shall not be affected by the sum of the tolerances permitted for the upper part of each ridge.

Dimensions in millimetres

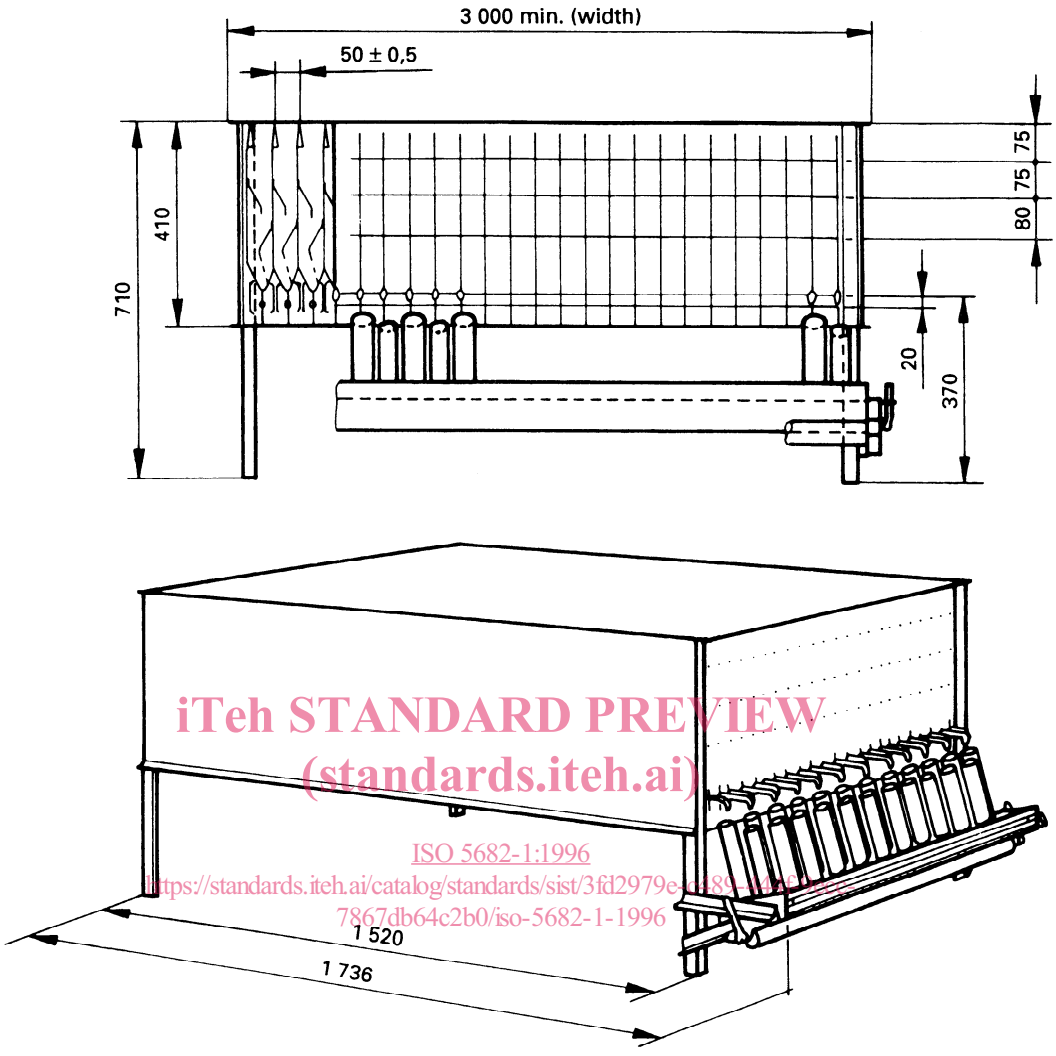

Figure 1 — Example of a distribution bench

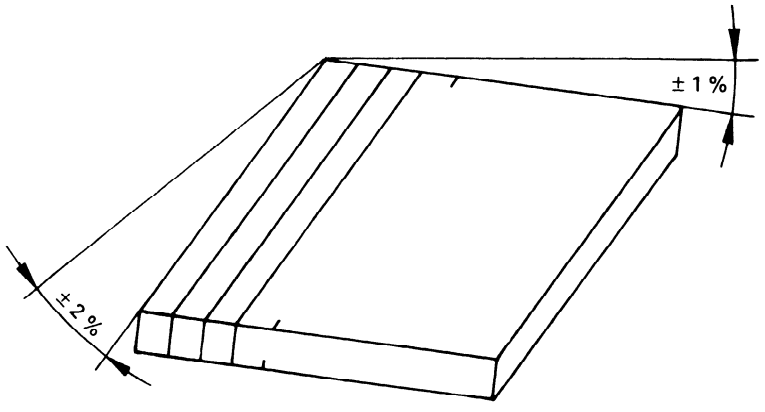

Figure 2 — Groove characteristics

5.2.2 Upper part of the walls

The upper part of the walls is formed by a symmetrical chamfered edge with may be rounded off and shall have the following characteristics:

a)the height of the chamfered edge shall be at least equal to three times the thickness of the wall;

b)the thickness of the chamfered edge at its upper part shall be not greater than 1 mm;

c)the rounding-off radius shall be not greater than 0,5 mm;

d)no point of the ridges shall be more than 2 mm above or below the mean plane of the ridges.

6 General test conditions

All the operational data and test parameters shall be stated in the test report, of which an example is given in annex B.

6.1 Temperature and relative humidity

The temperature of the test liquid and the air temperature of the test premises shall be between 10 °C and 25 °C during the test. The relative humidity of the test premises shall be normally not less than 50 %. The temperature and the relative humidity shall be stated in the test report.

6.2 Pressures

During the test period, the pressure shall not vary by more than ± 2,5 % of the test pressure. The test pressures shall be stated in the test report.

The pressure shall be taken downstream of the anti-drip device, the measurement being taken without the nozzle filter.

7 Determination of the characteristics of the sprayer nozzles

For each test, the general test conditions shall be in conformity with those specified in clause 6.

7.1 Uniformity of discharge rate of the nozzles

7.1.1 Sampling

Take 20 complete nozzles of the same type at random. State the sampling conditions in the test report and note, in particular, the size of the stock, the place of sampling, etc. In addition, state in the test report the complete designation of the nozzles, including the discs and tips for the cone spray nozzles.

The sample shall be taken by a person authorised by the test centre. This person shall also take a second sample, in the same conditions, which will be kept in the test centre in case of control.

The two samples shall be taken out of a lot of at least 200 nozzles.

7.1.2 Test liquid

Use the test liquid described in 4.1.

7.1.3 Measurements

Measure, for each complete nozzle, the volume discharged at the test pressure of 0,3 MPa (3 bar) with an error of less than 1 %. The measuring time, measured with a watch (5.1.5) and with an error of less than 1 s, shall be greater than or equal to 60 s.

7.1.4 Results

The results shall be presented in the test report in the form of a graph or table in which the discharge rate of each nozzle is expressed as a percentage of the mean discharge rate of 20 complete nozzles.

7.2 Variations in discharge rate according to pressure

Perform this test with a nozzle for which the discharge rate is closest to the mean value determined in 7.1.

7.2.1 Test liquid

Use the test liquid described in 4.1.

7.2.2 Pressure

Perform the tests at the maximum and minimum pressures indicated by the manufacturer and at least two intermediate pressures. The differences between two consecutive pressures shall be less than or equal to 0,5 MPa (5 bar).

7.2.3 Measurements

Measure the discharge rate, in litres per minute, at each of the pressures indicated in 7.2.2, with an error of less than 1 %. The measuring time, measured with a watch (5.1.5) and with an error of less than 1 s, shall be greater than or equal to 60 s.

7.2.4 Results

The results shall be presented in the test report in the form of either a graph in which the discharge rate is indicated on the y-axis and the pressure on the x-axis, or a table.

7.3 Distribution of the spray

Perform this test with a nozzle for which the discharge rate is closest to the mean value determined in 7.1.

7.3.1 Test liquid

Use the test liquid described in 4.1.

7.3.2 Pressure

Perform the test at the maximum and minimum pressures stated by the manufacturer and at least two intermediate pressures.

7.3.3 Position of the nozzle

During the test, the nozzle shall be positioned vertically above a ridge of the distribution bench and in its normal working attitude in order to direct its spray onto the bench. If the manufacturer indicated one particular position, the test shall be made in this position.

If the manufacturer states an optimum height for use, carry out the test at the height stated and 150 mm above and below this height. If the manufacturer does not indicate any heights, carry out the tests at the following heights: 400 mm, 500 mm, 600 mm, 700 mm and, if necessary, at 300 mm and 800 mm. The height shall be measured between the edge of the ridge and the orifice of the nozzle.

Flat spray nozzles shall be positioned for the test so that the longest dimension of the spray pattern is perpendicular to the grooves.

Cone nozzles shall be tested in the following configurations (see figure 3):

a)in their initial configuration;

b)in a second configuration resulting from a 90° rotation of the nozzle disc or nut in its assembly;

c) when the spiral can turn in relation to the disc with the nozzle reassembled with the swirl plate turned through 90° in relation to configuration b).

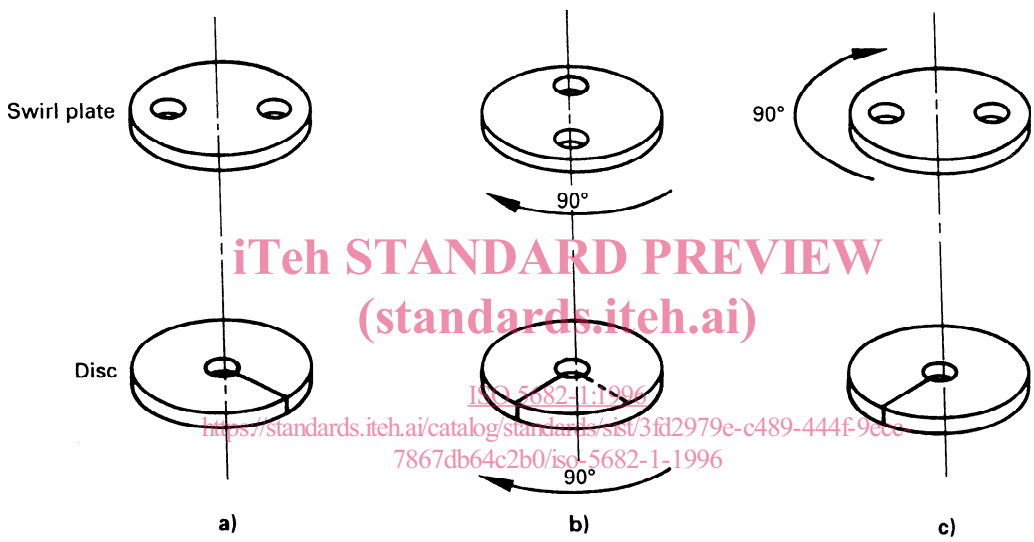

Figure 3 — Configuration for testing cone nozzles

7.3.4 Measurements

Stop the test as soon as the amount of liquid collected in one of the tubes has reached 90 % of its capacity. Record the quantities collected in each tube.

7.3.5 Results

Represent the distribution of the spray by a graph or a table indicating the values as percentages of the mean quantity of liquid collected in all the grooves.

7.4 Variations in flow rate and spray distribution due to abrasion (accelerated wear test)

This test does not prejudge the life of the nozzle in the actual conditions of use, but is used to compare the resistance of the nozzles to wear and the resulting deterioration in their distribution. It shall be carried out on five nozzles, for which the discharge rate is closest to the mean value determined in 7.1.

7.4.1 Test liquid

Use the test liquid described in 4.2. The temperature of the liquid shall be (20 ± 3) °C throughout the test.

Ensure that the abrasive material is always well dispersed throughout the liquid (for example, by means of a controlled escape of compressed air with a pressure such that after 5 min of operation, there is no longer any deposit at the bottom of the tank). Ascertain, if need be by a preliminary test, that the test liquid retains its abrasiveness in relation to the material of the nozzles throughout the duration of the test defined in 7.4.3. If it does not, replace the abrasive liquid as often as necessary.

NOTE — A preliminary test can be carried out using identical metering orifices from the same batch and manufactured from a suitable material for the nozzles being tested, measuring the increase in discharge rate after passing through a given volume of the test liquid at the specified pressure.

7.4.2 Test pressure

The test pressure, p_t, shall be chosen as follows, according to the maximum pressure, p_s, recommended by the supplier:

a) 0,05 MPa $< p_s \leqslant$ 0,3 MPa: p_t = 0,1 MPa

b) 0,3 MPa $< p_s \leqslant$ 0,5 MPa: p_t = 0,3 MPa

c) 0,5 MPa $< p_s \leqslant$ 1 MPa: p_t = 0,5 MPa

For nozzles excluded from this classification, the test pressure shall be stated in the test report.

7.4.3 Measurements

Measure the discharge rate for each of the five nozzles at the instant corresponding to the wear times chosen from the following series, in function of the characteristics of the material of the nozzle tip, in

0 min,	1 min,	2 min,	3 min,	4 min,
5 min,	10 min,	15 min,	20 min,	25 min,
30 min,	40 min,	50 min,	1 h,	1 h 30 min,
2 h,	3 h,	4 h,	5 h,	7 h 30 min,
10 h,	15 h,	20 h,	30 h,	40 h,
50 h,	75 h,	100 h.		

The test is stopped when the increase of the discharge rate is at least 15 % or when the wear time reaches 100 h.

Carry out the spray distribution test (7.3) at the beginning and end of the test, and when the discharge rate of 3 nozzles exceeds the initial discharge rate by 5 %, 10 % and 15 %.

7.4.4 Results

7.4.4.1 Discharge

For all measurements, state in two tables

—the discharge rate for each of the five nozzles, in litres per minute,

—the discharge rate variation for each of the five nozzles, expressed as a percentage of initial discharge rate.

Draw the graph of discharge rate variations as a function of the wear time.