IEC 62149-3

Edition 2.0 2014-05

INTERNATIONAL STANDARD

NORME INTERNATIONALE

Fibre optic active components and devices – Performance standards – Part 3: Modulator-integrated laser diode transmitters for 2,5-Gbit/s to 40-Gbit/s fibre optic transmission systems

Composants et dispositifs actifs à fibres optiques – Normes de performances – Partie 3: Emetteurs à diodes laser à modulateur intégré pour des systèmes de transmission à fibres optiques de 2,5 Gbit/s à 40 Gbit/s

IEC 62149-3:2014-05(en-fr)

IEC Central Office
3, rue de Varembé
CH-1211 Geneva 20
Switzerland

Tel.: +41 22 919 02 11
Fax: +41 22 919 03 00
info@iec.ch
www.iec.ch

About the IEC
The International Electrotechnical Commission (IEC) is the leading global organization that prepares and publishes International Standards for all electrical, electronic and related technologies.

About IEC publications
The technical content of IEC publications is kept under constant review by the IEC. Please make sure that you have the latest edition, a corrigenda or an amendment might have been published.

IEC Catalogue - webstore.iec.ch/catalogue
The stand-alone application for consulting the entire bibliographical information on IEC International Standards, Technical Specifications, Technical Reports and other documents. Available for PC, Mac OS, Android Tablets and iPad.

IEC publications search - www.iec.ch/searchpub
The advanced search enables to find IEC publications by a variety of criteria (reference number, text, technical committee,…). It also gives information on projects, replaced and withdrawn publications.

IEC Just Published - webstore.iec.ch/justpublished
Stay up to date on all new IEC publications. Just Published details all new publications released. Available online and also once a month by email.

Electropedia - www.electropedia.org
The world's leading online dictionary of electronic and electrical terms containing more than 30 000 terms and definitions in English and French, with equivalent terms in 14 additional languages. Also known as the International Electrotechnical Vocabulary (IEV) online.

IEC Glossary - std.iec.ch/glossary
More than 55 000 electrotechnical terminology entries in English and French extracted from the Terms and Definitions clause of IEC publications issued since 2002. Some entries have been collected from earlier publications of IEC TC 37, 77, 86 and CISPR.

IEC Customer Service Centre - webstore.iec.ch/csc
If you wish to give us your feedback on this publication or need further assistance, please contact the Customer Service Centre: csc@iec.ch.

A propos de l'IEC
La Commission Electrotechnique Internationale (IEC) est la première organisation mondiale qui élabore et publie des Normes internationales pour tout ce qui a trait à l'électricité, à l'électronique et aux technologies apparentées.

A propos des publications IEC
Le contenu technique des publications IEC est constamment revu. Veuillez vous assurer que vous possédez l'édition la plus récente, un corrigendum ou amendement peut avoir été publié.

Catalogue IEC - webstore.iec.ch/catalogue
Application autonome pour consulter tous les renseignements bibliographiques sur les Normes internationales, Spécifications techniques, Rapports techniques et autres documents de l'IEC. Disponible pour PC, Mac OS, tablettes Android et iPad.

Recherche de publications IEC - www.iec.ch/searchpub

La recherche avancée permet de trouver des publications IEC en utilisant différents critères (numéro de référence, texte, comité d'études,…). Elle donne aussi des informations sur les projets et les publications remplacées ou retirées.

IEC Just Published - webstore.iec.ch/justpublished

Restez informé sur les nouvelles publications IEC. Just Published détaille les nouvelles publications parues. Disponible en ligne et aussi une fois par mois par email.

Electropedia - www.electropedia.org

Le premier dictionnaire en ligne de termes électroniques et électriques. Il contient plus de 30 000 termes et définitions en anglais et en français, ainsi que les termes équivalents dans 14 langues additionnelles. Egalement appelé Vocabulaire Electrotechnique International (IEV) en ligne.

Glossaire IEC - std.iec.ch/glossary
Plus de 55 000 entrées terminologiques électrotechniques, en anglais et en français, extraites des articles Termes et Définitions des publications IEC parues depuis 2002. Plus certaines entrées antérieures extraites des publications des CE 37, 77, 86 et CISPR de l'IEC.

Service Clients - webstore.iec.ch/csc

Si vous désirez nous donner des commentaires sur cette publication ou si vous avez des questions contactez-nous: csc@iec.ch.

IEC 62149-3

Edition 2.0 2014-05

INTERNATIONAL STANDARD

NORME INTERNATIONALE

Fibre optic active components and devices – Performance standards – Part 3: Modulator-integrated laser diode transmitters for 2,5-Gbit/s to 40-Gbit/s fibre optic transmission systems

Composants et dispositifs actifs à fibres optiques – Normes de performances – Partie 3: Emetteurs à diodes laser à modulateur intégré pour des systèmes de transmission à fibres optiques de 2,5 Gbit/s à 40 Gbit/s

INTERNATIONAL
ELECTROTECHNICAL
COMMISSION

COMMISSION
ELECTROTECHNIQUE
INTERNATIONALE

PRICE CODE
CODE PRIX N

ICS 33.180.20

ISBN 978-2-8322-1585-2

Warning! Make sure that you obtained this publication from an authorized distributor.
Attention! Veuillez vous assurer que vous avez obtenu cette publication via un distributeur agréé.

CONTENTS

INTERNATIONAL ELECTROTECHNICAL COMMISSION

FIBRE OPTIC ACTIVE COMPONENTS AND DEVICES – PERFORMANCE STANDARDS –

Part 3: Modulator-integrated laser diode transmitters for 2,5-Gbit/s to 40-Gbit/s fibre optic transmission systems

FOREWORD

1) The International Electrotechnical Commission (IEC) is a worldwide organization for standardization comprising all national electrotechnical committees (IEC National Committees). The object of IEC is to promote international co-operation on all questions concerning standardization in the electrical and electronic fields. To this end and in addition to other activities, IEC publishes International Standards, Technical Specifications, Technical Reports, Publicly Available Specifications (PAS) and Guides (hereafter referred to as "IEC Publication(s)"). Their preparation is entrusted to technical committees; any IEC National Committee interested in the subject dealt with may participate in this preparatory work. International, governmental and non-governmental organizations liaising with the IEC also participate in this preparation. IEC collaborates closely with the International Organization for Standardization (ISO) in accordance with conditions determined by agreement between the two organizations.

2) The formal decisions or agreements of IEC on technical matters express, as nearly as possible, an international consensus of opinion on the relevant subjects since each technical committee has representation from all interested IEC National Committees.

3) IEC Publications have the form of recommendations for international use and are accepted by IEC National Committees in that sense. While all reasonable efforts are made to ensure that the technical content of IEC Publications is accurate, IEC cannot be held responsible for the way in which they are used or for any misinterpretation by any end user.

4) In order to promote international uniformity, IEC National Committees undertake to apply IEC Publications transparently to the maximum extent possible in their national and regional publications. Any divergence between any IEC Publication and the corresponding national or regional publication shall be clearly indicated in the latter.

5) IEC itself does not provide any attestation of conformity. Independent certification bodies provide conformity assessment services and, in some areas, access to IEC marks of conformity. IEC is not responsible for any services carried out by independent certification bodies.

6) All users should ensure that they have the latest edition of this publication.

7) No liability shall attach to IEC or its directors, employees, servants or agents including individual experts and members of its technical committees and IEC National Committees for any personal injury, property damage or other damage of any nature whatsoever, whether direct or indirect, or for costs (including legal fees) and expenses arising out of the publication, use of, or reliance upon, this IEC Publication or any other IEC Publications.

8) Attention is drawn to the Normative references cited in this publication. Use of the referenced publications is indispensable for the correct application of this publication.

9) Attention is drawn to the possibility that some of the elements of this IEC Publication may be the subject of patent rights. IEC shall not be held responsible for identifying any or all such patent rights.

International Standard IEC 62149-3 has been prepared by subcommittee 86C: Fibre optic systems and active devices, of IEC technical committee 86: Fibre optics

This second edition cancels and replaces the first edition published in 2004 and constitutes a technical revision.

The significant technical change with respect to the previous edition is as follows:

The performance standards covered by this standard are now extended to a 40 Gb/s-class system from their original 2,5 Gb/s.

The text of this standard is based on the following documents:

CDV	Report on voting
86C/1157/CDV	86C/1230/RVC

Full information on the voting for the approval of this standard can be found in the report on voting indicated in the above table.

This publication has been drafted in accordance with the ISO/IEC Directives, Part 2.

A list of all parts of the IEC 62149 series, published under the general title *Fibre optic active components and devices – Performance standards,* can be found on the IEC website.

The committee has decided that the contents of this publication will remain unchanged until the stability date indicated on the IEC web site under "http://webstore.iec.ch" in the data related to the specific publication. At this date, the publication will be

- reconfirmed,
- withdrawn,
- replaced by a revised edition, or
- amended.

INTRODUCTION

Fibre optic transmitters are used to convert electrical signals into optical signals. This part of IEC 62149 covers the performance standard for optical modulators monolithically integrated with laser diodes for 2,5 Gbit/s to 40 Gbit/s multi-channel optical telecommunication systems.

FIBRE OPTIC ACTIVE COMPONENTS AND DEVICES – PERFORMANCE STANDARDS –

Part 3: Modulator-integrated laser diode transmitters for 2,5-Gbit/s to 40-Gbit/s fibre optic transmission systems

1 Scope

This part of IEC 62149 covers the performance specification for optical modulators monolithically integrated with laser diodes for 2,5 Gbit/s to 40 Gbit/s multi-channel fibre optic transmission systems. This performance standard contains a definition of the product performance requirements together with a series of sets of tests and measurements with clearly defined conditions, severities and pass/fail criteria. The tests are intended to be run as an initial design verification to prove any product's ability to satisfy the performance standard's requirements. This standard is only applicable for on-off keying format.

A product that has been shown to meet all the requirements of a performance standard can be declared as complying with the performance standard, but should then be controlled by a quality assurance program.

2 Normative references

The following documents, in whole or in part, are normatively referenced in this document and are indispensable for its application. For dated references, only the edition cited applies. For undated references, the latest edition of the referenced document (including any amendments) applies.

IEC 60068-2-1, *Environmental testing – Part 2: Tests – Tests A: Cold*

IEC 60068-2-2, *Basic environmental testing procedures – Part 2: Tests – Tests B: Dry heat*

IEC 60068-2-6, *Environmental testing – Part 2: Tests – Test Fc: Vibration (sinusoidal)*

IEC 60068-2-14, *Basic environmental testing procedures – Part 2: Tests – Test N: Change of temperature*

IEC 60068-2-27, *Basic environmental testing procedures – Part 2: Tests – Test Ea and guidance: Shock*

IEC 60068-2-78, *Environmental testing – Part 2-78: Tests – Test Cab: Damp heat, steady state*

IEC 60749-7, *Semiconductor devices – Mechanical and climatic test methods – Part 7: Internal moisture content measurement and the analysis of other residual gases*

IEC 60749-26, *Semiconductor devices – Mechanical and climatic test methods – Part 26: Electrostatic discharge (ESD) sensitivity testing – Human body model (HBM)*

IEC 60825-1, *Safety of laser products – Part 1: Equipment classification and requirements*

IEC 60950-1, *Information technology equipment – Safety – Part 1: General requirements*

IEC 62007-1, *Semiconductor optoelectronic devices for fibre optic system applications – Part 1: Specification template for essential ratings and characteristics*

ITU-T Recommendation G.694.1: *Spectral grids for WDM applications: DWDM frequency grid*

MIL-STD-883, *U.S. Department of Defense – Test method standard – Microcircuits*

3 Terms, definitions and symbols

3.1 Terms and definitions

For the purposes of this document, terminology concerning physical concepts, types of devices, general terms and definitions related to ratings and characteristics contained in IEC 62007-1 apply.

3.2 Symbols

X modulation speed in Gbit/s

PD photodiode

T_{LD} laser sub-mount temperature

T_s shortening of symbol T_{sub}

V_{fm} forward modulation voltage

V_{rm} reverse modulation voltage

V_{rmc} reverse modulation centre voltage

V_{rmpp} peak-to-peak modulation voltage

T_{sub} submount temperature

4 Product parameters

4.1 Absolute limiting ratings

Absolute limiting (maximum and/or minimum) ratings given in Table 1 imply that no catastrophic damage will occur if the product is subject to these ratings for short periods, provided each limiting parameter is in isolation and all other parameters have values within the normal performance parameters. It should not be assumed that limiting values of more than one parameter can be applied at any one time.

Table 1 – Absolute limiting ratings

Parameter	Symbol	Minimum	Maximum	Unit
Operating case temperature (at the bottom of the case)	T_{case}	0	+70	°C
Storage temperature	T_{stg}	–40	+85	°C
Soldering temperature (minimum distance to case specified)	T_{sid}		260/10	°C/s
Laser diode				
Reverse voltage	$V_{R(LD)}$		2	V
Continuous forward current	$I_{F(LD)}$		200	mA
Continuous radiant power	ϕ_e		10	mW
Photodiode				
Reverse voltage	$V_{R(PD)}$		10	V
Forward current	$I_{F(PD)}$		1	mA
Modulator				
Reverse modulation voltage	V_{Rm}		5	V
Forward modulation voltage	V_{Fm}		1	V
Thermal electric cooler				
Cooler current under cooling and heating	I_P		1,5	A
Cooler voltage under cooling and heating	V_P		2,5	V

4.2 Operating environment

The operating environment is indicated in Table 2.

Table 2 – Operating environment

Parameter	Symbol	Value		Unit
		Minimum	Maximum	
Operating case temperature	T_{case}	0	70	°C

4.3 Functional specification

Functional specification shall be within the limit specified in Table 4 at the operating conditions specified in Table 3.

Table 3 – Operating conditions for functional specification

Parameter	Symbol	Value		Unit
		Minimum	Maximum	
Laser operating current	I_{op}	50	200	mA
Laser operating temperature	T_{op}	15	35	°C
Reverse modulation centre voltage	V_{rmc}	0,5	1,5	V
Peak to peak modulation voltage	V_{rmpp}	2	3	V
NOTE Operating conditions are adjusted to match ITU-T Recommendation G.694.1 wavelength within the above specified limit.				

Table 4 – Functional specification

Characteristics and conditions at $T_{LD} = T_{op}$, $I_{F(LD)} = I_{op}$ Reverse modulation voltage (V_{rm}) = 0 V, unless otherwise stated		Symbol	Value		Unit
			Minimum	Maximum	
Laser and modulator diode					
Modulation speed		X	2,5	43,02	Gbit/s
Forward voltage at specified ϕ_e or I_{op}		$V_{F(LD)}$		2,2	V
Threshold current		$I_{(TH)}$		50	mA
Radiant power at specified I_{op}		ϕ_e	0,5		mW
Kink free radiant power		ϕ_e	0,6		mW
Extinction ratio at specified ϕ_e or I_{op} (under modulated conditions) [a]		ER	8,2		dB
Peak emission wavelength at specified ϕ_e or I_{op} (under modulated conditions) [a, b]		λ_P	[b]	[b]	nm
Side-mode suppression ratio at specified ϕ_e or I_{op} (under modulated conditions) [a]		$SMSR$	30		dB
Switching times at specified ϕ_e or I_{op} (under modulated conditions)	Rise time [a]	t_r		600/X	ps
	Fall time [a]	t_f		600/X	ps
RF return loss at specified ϕ_e or I_{op} V_{rm} = 1/2 V_{rmpp}, f = X GHz, 50 Ω termination		S_{11}	6,0		dB
Transmission penalty due to dispersion at specified ϕ_e or I_{op}, under modulated conditions and specified fibre length [a]		Pe		2	dB
Monitor photodiode					
Dark current at ϕ_e = 0 and specified $V_{R(PD)}$		I_{DARK}		10	nA
Monitor current at specified ϕ_e or I_{op} and $V_{R(PD)}$		I_M	50	2 000	µA
Tracking error between operating temperature range with reference at 25 °C at specified ϕ_e or I_{op} and $V_{R(PD)}$ specified		TE		0,5	dB
Thermal sensor					
Resistance at specified sensor current		R_s	9,5	10,5	kΩ
Thermister constant, B [a]		B	3 300	3 950	K
Thermal electric cooler					
Cooler current at $\Delta T = T_{case(max)} - T_{LD}$ and $\Delta T = T_{LD} - T_{case(min)}$ at specified ϕ or I_{op}		I_p		1,5	A
Cooler voltage at $\Delta T = T_{case(max)} - T_{LD}$ and $\Delta T = T_{LD} - T_{case(min)}$ at specified ϕ or I_{op}		V_p		2,5	V

[a] Definition and condition according to ITU-T G.957, PRBS $2^{23} - 1$, $V_{rm} = V_{rmc} \pm 1/2\ V_{rmpp}$.

[b] According to ITU-T Recommendation G.694.1.

[c] B = ln(R/R_0)/1/T-1/T_0) where R is the resistance at ambient temperature T (° K) and R_0 is the resistance at ambient temperature T_0 (° K).

4.4 Diagrams

Figure 1 provides a representative example of a schematic diagram.

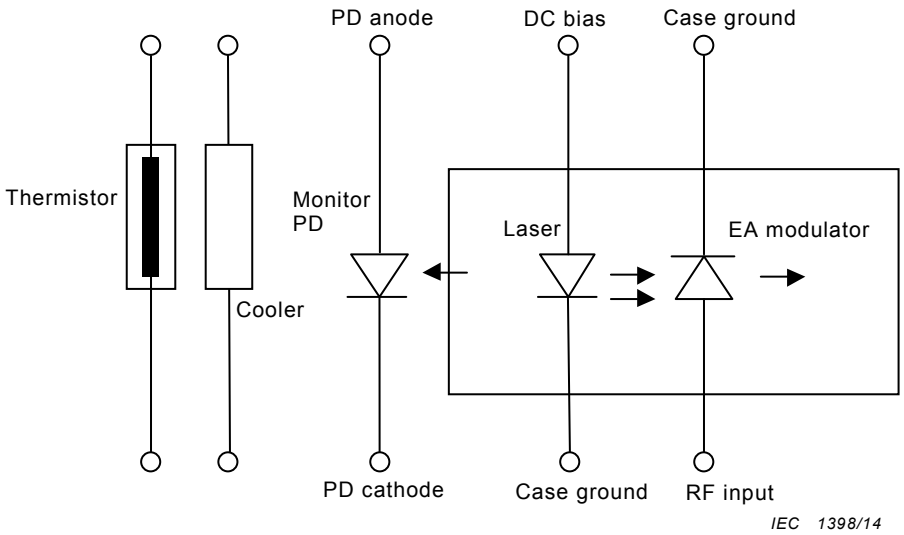

Figure 1 – Schematic diagram

5 Testing

5.1 General

Initial characterization and qualification shall be undertaken when a build standard has been completed and frozen. Qualification maintenance is carried using periodic testing programs. Test conditions for all tests unless otherwise stated are 25 °C ± 2 °C

5.2 Characterization testing

Characterization shall be carried out on at least 20 transmitters, taken from at least three different manufacturing lots. The test conditions are detailed in Table 5.