SLOVENSKI STANDARD
SIST EN 50180:2010

01-november-2010

Nadomešča:

SIST EN 50180:1997

Skoznjiki za napetosti nad 1 kV do 52 kV in tokove od 250 A do 3,15 kA za transformatorje, polnjene s tekočinami

Bushings above 1 kV up to 52 kV and from 250 A to 3,15 kA for liquid filled transformers

Durchführungen über 1 kV bis 52 kV und von 250 A bis 3,15 kA für flüssigkeitsgefüllte Transformatoren

Traversées de tensions supérieures à 1 kV jusqu'à 52 kV et de 250 A à 3,15 kA pour transformateurs à remplissage de liquide

Ta slovenski standard je istoveten z: EN 50180:2010

ICS:

29.080.20	Skoznjiki	Bushings
29.180	Transformatorji. Dušilke	Transformers. Reactors

SIST EN 50180:2010 **en,fr,de**

EUROPEAN STANDARD

NORME EUROPÉENNE

EUROPÄISCHE NORM

EN 50180

September 2010

ICS 29.080.20

Supersedes EN 50180:1997

English version

Bushings above 1 kV up to 52 kV and from 250 A to 3,15 kA for liquid filled transformers

Traversées de tensions supérieures à 1 kV jusqu'à 52 kV et de 250 A à 3,15 kA pour transformateurs immergés dans un liquide

Durchführungen über 1 kV bis 52 kV und von 250 A bis 3,15 kA für flüssigkeitsgefüllte Transformatoren

This European Standard was approved by CENELEC on 2010-09-01. CENELEC members are bound to comply with the CEN/CENELEC Internal Regulations which stipulate the conditions for giving this European Standard the status of a national standard without any alteration.

Up-to-date lists and bibliographical references concerning such national standards may be obtained on application to the Central Secretariat or to any CENELEC member.

This European Standard exists in three official versions (English, French, German). A version in any other language made by translation under the responsibility of a CENELEC member into its own language and notified to the Central Secretariat has the same status as the official versions.

CENELEC members are the national electrotechnical committees of Austria, Belgium, Bulgaria, Croatia, Cyprus, the Czech Republic, Denmark, Estonia, Finland, France, Germany, Greece, Hungary, Iceland, Ireland, Italy, Latvia, Lithuania, Luxembourg, Malta, the Netherlands, Norway, Poland, Portugal, Romania, Slovakia, Slovenia, Spain, Sweden, Switzerland and the United Kingdom.

CENELEC

European Committee for Electrotechnical Standardization
Comité Européen de Normalisation Electrotechnique
Europäisches Komitee für Elektrotechnische Normung

Management Centre: Avenue Marnix 17, B - 1000 Brussels

Ref. No. EN 50180:2010 E

Foreword

This European Standard was prepared by the Technical Committee CENELEC TC 36A, Insulated bushings. It was submitted to the Unique Acceptance Procedure and was approved by CENELEC as EN 50180 on 2010-09-01.

This document supersedes EN 50180:1997.

Attention is drawn to the possibility that some of the elements of this document may be the subject of patent rights. CEN and CENELEC shall not be held responsible for identifying any or all such patent rights.

The following dates are proposed:

– latest date by which the EN has to be implemented at national level by publication of an identical national standard or by endorsement	(dop)	2011-09-01
– latest date by which the national standards conflicting with the EN have to be withdrawn	(dow)	2013-09-01

Contents

Introduction 5
1 Scope 5
2 Normative references 5
3 Definitions 5
4 Requirements 6
4.1 Application 6
4.2 Standard values of maximum voltage (U_m) 6
4.3 Standard values of rated current (I_r) 6
4.4 Compliance 6
4.5 Common dimensions 6
4.6 Detail dimensions and creepage distances of open type bushings 7
4.7 Detail dimensions of plug-in type bushings 19

Annex A (normative) **Detail drawings of porcelain** 26

Figures

Figure 1 - Common dimensions for open and plug-in type bushings 7
Figure 2 - 250 A types 12 to 36 kV 8
Figure 3 - 630 A types 12 to 36 kV 10
Figure 4 – 1 250 A types 12 to 36 kV 12
Figure 5 – 2 000 A – 3 150 A types 12 to 36 kV 14
Figure 6 - 250 A – 630 A types 52 kV 16
Figure 7 – 1 250 A – 2 000 A – 3 150 A types 52 kV 18
Figure 8 - Outside cone plug-in type bushings 20
Figure 9 - Details of outside cone plug-in type bushings 22
Figure 10 - Inside cone plug-in type bushings 24
Figure 11 - Details of inside cone plug-in type bushings 25
Figure A.1 - Insulator (item N°.1), type 1 26
Figure A.3 - Insulator (Item n°1), type 3 26
Figure A.2 - Insulator (Item n°1), type 2 26
Figure A.4 - Insulator (Item n°1), type 4 27
Figure A.5 - Insulator (Item n°1), type 5 27
Figure A.6 - Insulator (Item n°1), type 6 28
Figure A.7 - Insulator (Item n°1), type 7 28
Figure A.8 - Insulator (Item n°1), type 8 29
Figure A.9 - Insulator (Item n°1), type 9 29
Calculated nominal distance AB of represented insulator 760 mm 29
Calculated nominal creepage distance AB of represented insulator 1155 mm 29
Figure A.10 - Insulator (Item n°1), type 21 30
Figure A.11 - Insulator (Item n°1), type 22 30
Figure A.12 - Insulator (Item n°1), type 23 & 23M 31
Figure A.13 - Insulator (Item n°1), type 24 & 24M 31
Figure A.14 - Insulator (Item n°1), type 25 32
Figure A.15 - Insulator (Item n°1), type 26 32
Figure A.16 - Insulator (Item n°1), type 27&27M 33
Figure A.17 - Insulator (Item n°1), type 28 & 28M 33
Figure A.18 - Insulator (Item n°1), type 29 34
Figure A.19 - Insulator (Item n°1), type 30 35
Figure A.20 - Insulator (Item n°1), type 31 35

Figure A.21 - Adjusting ring 37

Tables

Table 1 - Common dimensions for open and plug-in type bushings 7
Table 2 - Dimensions, 250 A types 12 to 36 kV 9
Table 3 - List of components, 250 A types 12 to 36 kV 9
Table 4 - Dimensions, 630 A types 12 to 36 kV 10
Table 5 - List of components - 630 A types 12 to 36 kV 11
Table 6 - Dimensions, 1 250 A types 12 to 36 kV 13
Table 7 - List of components, 1 250 A types 12 to 36 kV 13
Table 8 - Dimensions, 2 000 A – 3 150 A types 12 to 36 kV 15
Table 9 - List of components 2 000 A – 3 150 A types 12 to 36 kV 15
Table 10 - Dimensions, 250 A - 630 A types 52 kV 17
Table 11 - List of components 250 A - 630 A types 52 kV 17
Table 12 - Dimensions, 1 250 A – 2 000 A – 3 150 A types 52 kV 19
Table 13 - List of components 1 250 A – 2000 A – 3 150 A types 52 kV 19
Table 14 - Interface dimensions 21
Table 15 - Bushing dimensions 23
Table 16 - Interface dimensions 24
Table 17 - Interface dimensions 25

Introduction

The object of this European Standard is to specify the requirements to ensure interchangeability of bushings having highest voltages above 1 kV up to 52 kV and rated currents from 250 A up to 3 150 A for insulating liquid filled transformers.

1 Scope

This European Standard is applicable to ceramic and resin insulated bushings having highest voltages above 1 kV up to 52 kV, rated currents from 250 A up to 3 150 A and frequencies from 15 Hz up to 60 Hz for insulating liquid filled transformers.

This standard establishes essential dimensions, to ensure interchangeability of bushings and to ensure adequate mounting and interchangeability of mating plug-in separable connectors of equivalent ratings.

2 Normative references

The following referenced documents are indispensable for the application of this document. For dated references, only the edition cited applies. For undated references, the latest edition of the referenced document (including any amendments) applies.

EN 62155, Hollow pressurized and unpressurized ceramic and glass insulators for use in electrical equipment with rated voltages greater than 1 000 V (IEC 62155)

EN 60672-3, Ceramic and glass-insulating materials - Part 3: Specifications for individual materials (IEC 60672-3)

EN 60137, Bushings for alternating voltages above 1 000 V (IEC 60137)

IEC 60815, Selection and dimensioning of high-voltage insulators intended for use in polluted conditions

IEC Guide 109 and Cenelec TC 111X document[1)], Environmental aspects - Inclusion in electrotechnical product standards

NOTE It is highly recommended to minimize the impact of bushings on the environment during all phases of their life (including manufacturing, operation during service life, dismantling after their end of life and disposal or recycling).

IEC Guide 109 and document by CENELEC TC 111X "*Environmental standardization for electrical and electronic products and systems*" after finalization can be used as helpful reference.

3 Definitions

For the purposes of this document, the following terms and definitions apply.

3.1
open type bushing
a bushing, one end of which is immersed in an insulating liquid with the other end in ambient air and exposed or not exposed to external atmospheric conditions

3.2
plug-in type bushing
a bushing, one end of which is immersed in an insulating medium and the other end designed to receive a separable insulated cable connector without which the bushing cannot function

1) Under development.

3.3
separable connector
a fully insulated termination permitting the connection and disconnection of the cable to and from the mating plug-in type bushing

3.4
interface type
bushing dimensions that insure mechanical and electrical interchangeability of bushing and separable connector of similar rating and type. Each interface type is designated by a letter or a number

3.5
bail holder
a fixture which facilitates anchoring of an externally mounted device (called the bail) designed to prevent undesirable separation of a separable connector and a bushing. A bail holder may or may not be an integral part of a bushing and is an optional feature

4 Requirements

4.1 Application

Open type bushings covered by this standard shall be suitable for operation with one end fully immersed in an insulating liquid and with the other in air.

Plug-in type bushings covered by this standard shall be suitable for operation with one end partially or fully immersed in an insulating medium and with the other in a separable connector.

4.2 Standard values of maximum voltage (U_m)

The value of U_m of a bushing shall be chosen from the standard values of the highest voltage for equipment U_m as given below, in kilovolts:

12 - 24 - 36 - 52

4.3 Standard values of rated current (I_r)

The value of I_r of a bushing shall be chosen from the standard values given below, in amperes:

250 - 400 - 630 - 800 -1250 - 2000 - 3150

4.4 Compliance

Bushings shall meet the requirements of EN 60137.

4.5 Common dimensions

The dimensions necessary for interchangeability between open and plug-in type bushings shall be as specified in Figure 1 and Table 1.

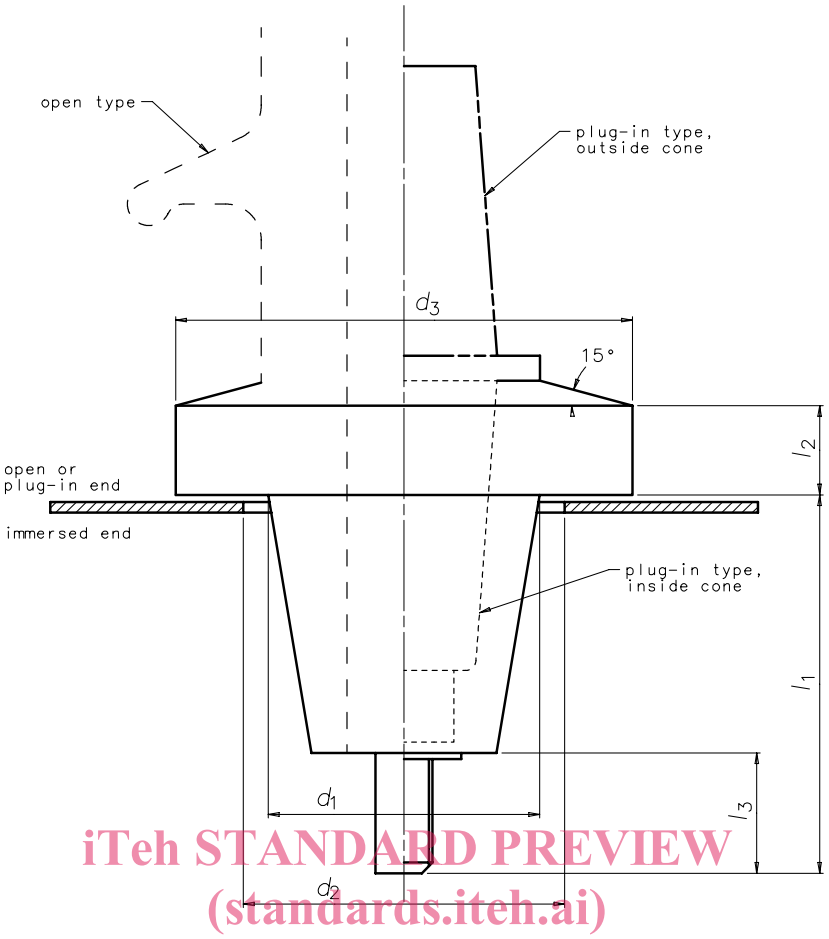

NOTE For open type bushings the internal connection may be a flexible conductor or a stem.

Figure 1 - Common dimensions for open and plug-in type bushings

Table 1 - Common dimensions for open and plug-in type bushings

I_r A	U_m kV	d_1 mm	d_2 $^{+2}_{0}$ mm	d_3 mm	l_1 max. mm	l_2 mm	l_3 max. mm
250	12-36	77^{0}_{-5}	80^{0}	111^{0}_{-7}	145	25^{0}_{-2}	45
400-630	12-36	87^{0}_{-6}	90	128^{0}_{-8}	195	25^{0}_{-2}	75
800-1 250	12-36	107^{0}_{-7}	110	165^{0}_{-10}	215	30^{0}_{-2}	100
2 000-3 150	12-36	132^{0}_{-8}	135	185^{0}_{-11}	215	30^{0}_{-2}	100
250-3 150	52	132^{0}_{-8}	135	185^{0}_{-11}	320	35^{+2}_{-2}	100

4.6 Detail dimensions and creepage distances of open type bushings

4.6.1 General recommendations

The dimensions necessary for interchangeability of open type bushings shall be as specified in the following figures (figure 2 up to figure 7) and tables (table 2 up to table 13).

These figures do not purport to show constructional details. The provision for arcing horns should be made if required.

Customized bushings are subject to an agreement between purchaser and manufacturer.

As a special requirement, bushings of 36 kV can be ordered with metallization or equivalent of the flange collar with extension “M” in the designation. The creepage distance, as indicated in the different tables of this standard, will be reduced of approximately 100 mm.

NOTE 52 kV bushings are always with metallization or equivalent solution.

4.6.2 250 A types 12 to 36 kV

Insulator types for 250 A may be clamped to the transformer tank using either the fixation method illustrated or a separate insulation piece on the inside of the tank.

This drawing does not purport to show constructional details.

All dimensions in mm

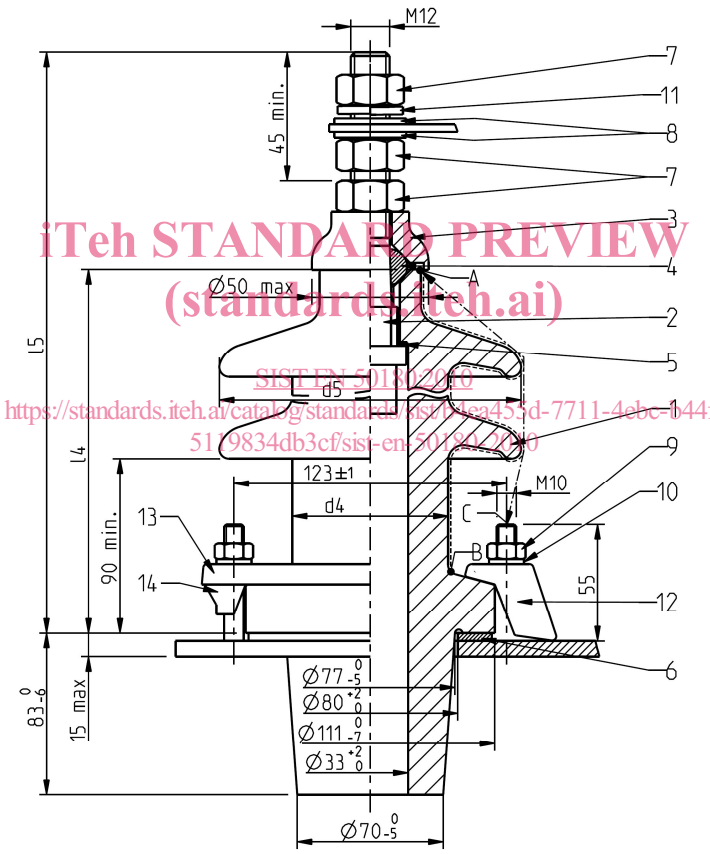

← - - → arcing distance AC
· -------- · creepage distance AB

Figure 2 - 250 A types 12 to 36 kV

Table 2 - Dimensions, 250 A types 12 to 36 kV

Designation	U_m kV	Min. nominal creepage Distance AB (mm) Pollution level (IEC/TS 60815) b	c	d	e	Insulator type	Arcing Distance AC mm	l_4 max. mm	l_5 max. mm	d_4 max. mm	d_5 max. mm
12-250/P1 12-250/P2	12	192	240			1	145	190	270	75	140
12-250/P4 24-250/P2	12 24	384	480	300	372	2	260	304	384	80	150
24-250/P3 36-250/P1	24 36	576		600		3	315	357	437	80	155
24-250/P4 36-250/P3	24 36		720	900	744	4	465	516	596	80	155
36-250/P4	36				1 116	5	485	516	596	80	190

Table 3 - List of components, 250 A types 12 to 36 kV

Item	Quantity 12-250/P1	12-250/P2	12-250/P4	24-250/P2	24-250/P3	24-250/P4	36-250/P1	36-250/P3	36-250/P4	Designation		Remarks
1	1	1								Insulator	Type 1	Porcelain
			1	1							Type 2	
					1		1				Type 3	
						1		1			Type 4	
									1		Type 5	
2	1									Terminal stud [a]		Brass
3	1									Cap [a]		Brass
4	1									Gasket [a]		Insulating liquid resistant material
5	1									Spacer [a]		
6	1									Packing [a]		Insulating liquid resistant material
7	3									Nut		Brass
8	2									Washer		Brass
9	As required									Nut		Corrosion-resistant
10	As required									Washer		Corrosion-resistant
11	1									Spring-washer		Corrosion-resistant
Variant A: by means of clamping pieces												
12	As required									Clamping piece [a]		Corrosion-resistant
Variant B: by means of clamping ring												
13	1									Clamping ring [a]		Corrosion-resistant
14	As required									Clamping paw [a]		Corrosion-resistant

[a] Constructional details are not covered by this standard.

4.6.3 630 A types 12 to 36 kV

This drawing does not purport to show constructional details.

All dimensions in mm

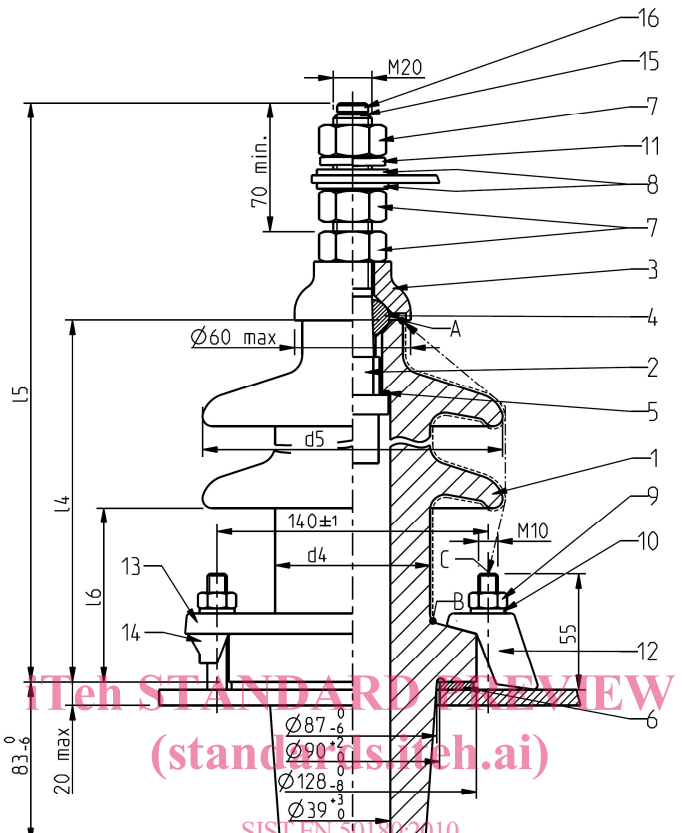

← - - → arcing distance AC
· -------- · creepage distance AB

Figure 3 - 630 A types 12 to 36 kV

Table 4 - Dimensions, 630 A types 12 to 36 kV

Designation	U_m kV	Min. nominal creepage distance AB (mm) Pollution level (IEC/TS 60815) b	c	d	e	Inulator Type	Arcing distance AC mm	l_4 max. mm	l_5 max. mm	l_6 max. mm	d_4 max. mm	d_5 max. mm
12-630/P3	12	192	240	300		6	190	235	350	90	80	155
12-630/P4 24-630/P2	12 24	384	480		372	7	285	325	440	90	85	170
24-630/P4 36-630/P2	24 36	576	720	600	744	8	375	423	540	100	85	180
36-630/P4	36			900	1116	9	475	515	630	100	85	210