IEC/PAS 61076-3-119

Edition 1.0 2013-10

PUBLICLY AVAILABLE SPECIFICATION

PRE-STANDARD

Connectors for electronic equipment – Product requirements – Part 3-119: Rectangular connectors – Detail specification for unshielded, free and fixed 10-way connectors with push-pull coupling for industrial environments with frequencies up to 100 MHz

Withdrawn

iTeh Standards
(https://standards.iteh.ai)
Document Preview

IEC PAS 61076-3-119:2013
https://standards.iteh.ai/catalog/standards/iec/6d75a960-e00c-4acd-9a3b-321d7bbf07dc/iec-pas-61076-3-119-2013



IEC/PAS 61076-3-119:2013(E)

THIS PUBLICATION IS COPYRIGHT PROTECTED
Copyright © 2013 IEC, Geneva, Switzerland

All rights reserved. Unless otherwise specified, no part of this publication may be reproduced or utilized in any form or by any means, electronic or mechanical, including photocopying and microfilm, without permission in writing from either IEC or IEC's member National Committee in the country of the requester.
If you have any questions about IEC copyright or have an enquiry about obtaining additional rights to this publication, please contact the address below or your local IEC member National Committee for further information.

IEC Central Office
3, rue de Varembé
CH-1211 Geneva 20
Switzerland

Tel.: +41 22 919 02 11
Fax: +41 22 919 03 00
info@iec.ch
www.iec.ch

About the IEC

The International Electrotechnical Commission (IEC) is the leading global organization that prepares and publishes International Standards for all electrical, electronic and related technologies.

About IEC publications

The technical content of IEC publications is kept under constant review by the IEC. Please make sure that you have the latest edition, a corrigenda or an amendment might have been published.

Useful links:

IEC publications search - www.iec.ch/searchpub

The advanced search enables you to find IEC publications by a variety of criteria (reference number, text, technical committee,…).
It also gives information on projects, replaced and withdrawn publications.

IEC Just Published - webstore.iec.ch/justpublished

Stay up to date on all new IEC publications. Just Published details all new publications released. Available on-line and also once a month by email.

Electropedia - www.electropedia.org

The world's leading online dictionary of electronic and electrical terms containing more than 30 000 terms and definitions in English and French, with equivalent terms in additional languages. Also known as the International Electrotechnical Vocabulary (IEV) on-line.

Customer Service Centre - webstore.iec.ch/csc

If you wish to give us your feedback on this publication or need further assistance, please contact the Customer Service Centre: csc@iec.ch.

Withdrawn
iTeh Standards
(https://standards.iteh.ai)
Document Preview
IEC PAS 61076-3-119:2013
https://standards.iteh.ai/catalog/standards/iec/0d75a960-e00c-4acd-9a3b-321d7bbf07dc/iec-pas-61076-3-119-2013

IEC/PAS 61076-3-119

Edition 1.0 2013-10

PUBLICLY AVAILABLE SPECIFICATION

PRE-STANDARD

Withdrawn

Connectors for electronic equipment – Product requirements – Part 3-119: Rectangular connectors – Detail specification for unshielded, free and fixed 10-way connectors with push-pull coupling for industrial environments with frequencies up to 100 MHz

iTeh Standards
(https://standards.iteh.ai)
Document Preview
IEC PAS 61076-3-119:2013
https://standards.iteh.ai/catalog/standards/iec/6d75a960-e00c-4acd-9a3b-321d7bbf07dc/iec-pas-61076-3-119-2013

INTERNATIONAL ELECTROTECHNICAL COMMISSION

PRICE CODE U

ICS 31.220.10

ISBN 978-2-8322-1123-6

Warning! Make sure that you obtained this publication from an authorized distributor.

® Registered trademark of the International Electrotechnical Commission

CONTENTS

FOREWORD 5
1 Scope 7
2 Normative references 8
3 Technical information 8
3.1 Terms and definitions 8
3.2 Systems of levels 8
3.2.1 Performance levels 8
3.2.2 Compatibility levels, according to IEC 61076-1:2006 8
3.3 Classification into climatic categories 9
3.4 Clearance and creepage distances 9
3.5 Current-carrying capacity 9
3.6 Marking 9
4 Dimensional information 9
4.1 General 9
4.2 Isometric view and common features 10
4.2.1 Common features 10
4.2.2 Reference system 10
4.3 Engagement (mating) information 10
4.3.1 Engaging (mating) direction 10
4.3.2 Contact levels and sequencing 10
4.3.3 Perpendicular to the engaging (mating) direction 10
4.3.4 Inclination 10
4.4 Fixed connectors 11
4.4.1 Dimensions 11
4.4.2 Terminations 12
4.5 Free connectors 12
4.5.1 Dimensions 12
4.5.2 Terminations 13
4.6 Accessories 13
4.7 Mounting information for connectors 13
4.7.1 Mounting on panels 13
4.8 Gauges 14
4.8.1 Sizing gauges and retention force gauges 14
4.8.2 Mechanical function, engaging/separating/insertion/withdrawal force gauges 15
4.8.3 Probes 15
4.8.4 Contact resistance gauge 15
4.8.5 Test panel (for voltage proof test) 15
4.8.6 Test panel (for EMC/ crosstalk, etc.) 15
5 Characteristics 15
5.1 General 15
5.2 Pin assignment and other definitions 15
5.3 Classification into climatic categories 16
5.4 Electrical characteristics 16
5.4.1 Creepage and clearance distances 16
5.4.2 Voltage proof 16
5.4.3 Current-carrying capacity 16

Withdrawn
IECNORM.COM : Click to view the full PDF of IEC PAS 61076-3-119:2013
Withdrawn
(https://standards.iteh.ai)
Document Preview
https://standards.iteh.ai/catalog/standards/iec/ad75a960-e00c-4acd-9a3b-321d7bbf07dc/iec-pas-61076-3-119-2013

5.4.4 Contact resistance 16
5.4.5 Insulation resistance 16
5.4.6 Impedance 16
5.4.7 Transmission characteristics 16
5.5 Mechanical characteristics 16
5.5.1 Mechanical operation 16
5.5.2 Effectiveness of connector coupling devices 17
5.5.3 Insertion and withdrawal forces 17
5.5.4 Contact retention in insert 17
5.5.5 Polarizing and coding method 17
5.6 Other characteristics 17
5.6.1 Shock and vibration (method sine) 17
5.6.2 Degree of protection provided by enclosures (IP code) 17
5.6.3 Screen and shielding properties 17
5.7 Environmental aspects 17
5.7.1 Marking of insulation material (plastics) 17
5.7.2 Design/ use of material 18
6 Test schedule 18
6.1 General 18
6.2 Climatic category 18
6.3 Clearance and creepage distances 18
6.4 Arrangement for contact resistance measurement 18
6.5 Arrangement for dynamic stress tests 18
6.6 Arrangement for testing static load: axial 19
6.7 Wiring of specimens 19
6.8 Test schedules 19
6.8.1 Basic (minimum) test schedule 19
6.8.2 Full test schedule 19
6.9 Test procedures and measuring methods 26
6.10 Pre-conditioning 26
6.11 Wiring and mounting of specimens 26
6.11.1 Wiring 26
6.11.2 Mounting 26

Figure 1 – Fixed (male) and free (female) connector 10
Figure 2 – Fixed male connector 11
Figure 3 – Free female connector 12
Figure 4 – Mounting drawing 14
Figure 5 – Gauge 15
Figure 6 – contact resistance arrangement 18
Figure 7 – contact resistance arrangement 19

Table 1 – Climatic categories - selected values for environmental performance level 1 9
Table 2 – Clearance and creepage distances 9
Table 3 – Dimensions of the fixed connector 12
Table 4 – Dimensions of the free connector 13
Table 5 – Mounting information 14

Withdrawn
iTeh Standards
(https://standards.iteh.ai)
Document Preview
https://standards.iteh.ai/catalog/standards/sist/...-119-2013

Table 6 – Gauge dimensions 15
Table 7 – Number of test specimens and contacts 20
Table 8 – Test group P 20
Table 9 – Test group AP 21
Table 10 – Test group BP 22
Table 11 – Test group CP 24
Table 12 – Test group DP 24
Table 13 – Test group EP 25

Withdrawn
iTeh Standards
(https://standards.iteh.ai)
Document Preview
IEC PAS 61076-3-119:2013
https://standards.iteh.ai/catalog/standards/iec/0d75a960-e00c-4acd-9a3b-321d7bbf07dc/iec-pas-61076-3-119-2013

INTERNATIONAL ELECTROTECHNICAL COMMISSION

CONNECTORS FOR ELECTRONIC EQUIPMENT – PRODUCT REQUIREMENTS –

Part 3-119: Rectangular connectors – Detail specification for unshielded, free and fixed 10-way connectors with push-pull coupling for industrial environments with frequencies up to 100 MHz

FOREWORD

1) The International Electrotechnical Commission (IEC) is a worldwide organization for standardization comprising all national electrotechnical committees (IEC National Committees). The object of IEC is to promote international co-operation on all questions concerning standardization in the electrical and electronic fields. To this end and in addition to other activities, IEC publishes International Standards, Technical Specifications, Technical Reports, Publicly Available Specifications (PAS) and Guides (hereafter referred to as "IEC Publication(s)"). Their preparation is entrusted to technical committees; any IEC National Committee interested in the subject dealt with may participate in this preparatory work. International, governmental and non-governmental organizations liaising with the IEC also participate in this preparation. IEC collaborates closely with the International Organization for Standardization (ISO) in accordance with conditions determined by agreement between the two organizations.
2) The formal decisions or agreements of IEC on technical matters express, as nearly as possible, an international consensus of opinion on the relevant subjects since each technical committee has representation from all interested IEC National Committees.
3) IEC Publications have the form of recommendations for international use and are accepted by IEC National Committees in that sense. While all reasonable efforts are made to ensure that the technical content of IEC Publications is accurate, IEC cannot be held responsible for the way in which they are used or for any misinterpretation by any end user.
4) In order to promote international uniformity, IEC National Committees undertake to apply IEC Publications transparently to the maximum extent possible in their national and regional publications. Any divergence between any IEC Publication and the corresponding national or regional publication shall be clearly indicated in the latter.
5) IEC itself does not provide any attestation of conformity. Independent certification bodies provide conformity assessment services and, in some areas, access to IEC marks of conformity. IEC is not responsible for any services carried out by independent certification bodies.
6) All users should ensure that they have the latest edition of this publication.
7) No liability shall attach to IEC or its directors, employees, servants or agents including individual experts and members of its technical committees and IEC National Committees for any personal injury, property damage or other damage of any nature whatsoever, whether direct or indirect, or for costs (including legal fees) and expenses arising out of the publication, use of, or reliance upon, this IEC Publication or any other IEC Publications.
8) Attention is drawn to the Normative references cited in this publication. Use of the referenced publications is indispensable for the correct application of this publication.
9) Attention is drawn to the possibility that some of the elements of this IEC Publication may be the subject of patent rights. IEC shall not be held responsible for identifying any or all such patent rights.

A PAS is a technical specification not fulfilling the requirements for a standard, but made available to the public.

Withdrawn
IECNORM.COM : Click to view the full PDF of IEC PAS 61076-3-119:2013
Document Preview
https://standards.iteh.ai/catalog/standards/iec/0d75a9b0-e00c-4acd-9a3b-321d7bbf07dc/iec-pas-61076-3-119-2013

IEC-PAS 61076-3-119 has been processed by subcommittee 48B: Connectors, of IEC technical committee 48: Electromechanical components and mechanical structures for electronic equipment.

The text of this PAS is based on the following document:	This PAS was approved for publication by the P-members of the committee concerned as indicated in the following document
Draft PAS	**Report on voting**
48B/2351/PAS	48B/2359/RVD

Following publication of this PAS, which is a pre-standard publication, the technical committee or subcommittee concerned may transform it into an International Standard.

This PAS shall remain valid for an initial maximum period of 3 years starting from the publication date. The validity may be extended for a single period up to a maximum of 3 years, at the end of which it shall be published as another type of normative document, or shall be withdrawn.

A bilingual version of this publication may be issued at a later date.

Withdrawn
iTeh Standards
(https://standards.iteh.ai)
Document Preview
IEC PAS 61076-3-119:2013
https://standards.iteh.ai/catalog/standards/iec/0d75a960-e00c-4acd-9a3b-321d7bbf07dc/iec-pas-61076-3-119-2013

CONNECTORS FOR ELECTRONIC EQUIPMENT – PRODUCT REQUIREMENTS –

Part 3-119: Rectangular connectors – Detail specification for unshielded, free and fixed 10-way connectors with push-pull coupling for industrial environments with frequencies up to 100 MHz

IEC SC 48B – Connector Specifications available from: IEC General secretariat or from the addresses shown on the inside cover.	IEC PAS 61076-3-1xx Ed. 1.0
ELECTRONIC COMPONENTS DETAIL SPECIFICATION in accordance with IEC 61076-1 and IEC 61076-3	Page 6 of 26
Outline drawing 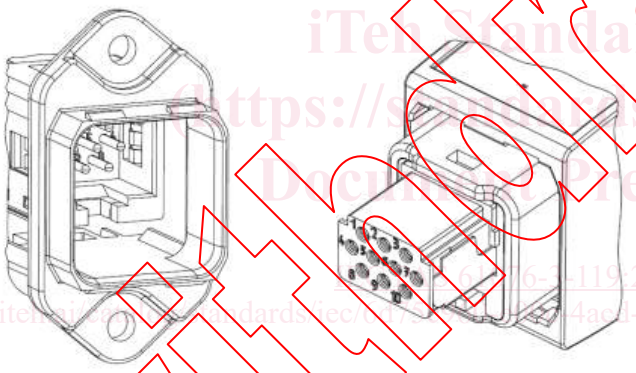	Rectangular connector for signals with push-pull coupling
	Fixed and free connectors, for industrial environments

Withdrawn
iTeh Standards
(https://standards.iteh.ai)
Document Preview
IEC PAS 61076-3-119:2013
https://standards.iteh.ai/catalog/standards/iec/6d75...4acd-9a3b-321d7bbf07dc/iec-pas-61076-3-119-2013

1 Scope

This part of IEC 61076 establishes specifications and test requirements for a connector with ten contacts, for use in industrial environments.

This PAS specifies free and fixed connector inserts, with round contacts, suitable for screw or crimp terminations. Other terminations techniques, as solder or printed board connections are upon agreement between manufacturer and user. The free and fixed connectors have a push-pull locking mechanism for IP65 and IP67 protection according to IEC 60529.

Connectors according this PAS are without breaking capacity COC according to IEC 61984, therefore they are not intended to be engaged or disengaged in normal use when live or under load, if not otherwise specified by the manufacturer.

2 Normative references

The following documents, in whole or in part, are normatively referenced in this document and are indispensable for its application. For dated references, only the edition cited applies. For undated references, the latest edition of the referenced document (including any amendments) applies.

IEC 60050-581:2008, *International Electrotechnical Vocabulary – Chapter 581: Electro-mechanical components for electronic equipment*

IEC 60068-1, *Environmental testing – Part 1: General and guidance*

IEC 60068-2-20, *Environmental testing - Part 2-20: Tests - Test T: Test methods for solderability and resistance to soldering heat of devices with leads*

IEC 60352 (all parts): *Solderless connections*

IEC 60512 (all parts), *Electromechanical components for electronic equipment – Basic testing procedures and measuring methods*

IEC 60512-1-2, *Connectors for electronic equipment - Tests and measurements - Part 1-2: General examination - Test 1b: Examination of dimension and mass*

IEC 60529:1989, *Degrees of protection provided by enclosures (IP Code)*

IEC 61076-1:2006, *Connectors for electronic equipment – Part 1: Generic specification*

IEC 61984:2008, *Connectors – Safety requirements and tests*

IEC 62197-1:2006, *Connectors for electronic equipment – Quality assessment requirements – Part 1: Generic specification*

IEC 62430, *Environmentally conscious design for electrical and electronic products*

IEC Guide 109, *Environmental aspects – Inclusion in electrotechnical product standards*

ISO 1302: 2002, *Geometrical Product Specifications (GPS) – Indication of surface texture in technical product documentation*

ISO 11469:2000, *Plastics – Generic identification and marking of plastic products*

3 Technical information

3.1 Terms and definitions

For the purposes of this document, the terms and definitions given in IEC 60050-581 apply.

3.2 Systems of levels

3.2.1 Performance levels

Not applicable for this PAS.

3.2.2 Compatibility levels, according to IEC 61076-1:2006

Connectors according to this PAS are supposed to be intermateable.

Withdrawn
iTeh Standards
(https://standards.iteh.ai)
Document Preview
IEC PAS 61076-3-119:2013
https://standards.iteh.ai/catalog/standards/iec/6d75a960-e00c-4acd-9a3b-321d7bbf07dc/iec-pas-61076-3-119-2013

3.3 Classification into climatic categories

Conditions: according to IEC 60068-1 and Table 1.

Table 1 – Climatic categories - selected values for environmental performance level 1

Climatic category	Lower temperature °C	Upper temperature °C	Damp heat steady state (days)
40/70/21	-40	70	21

3.4 Clearance and creepage distances

Clearance and creepage distances shall be measured according to IEC 60512-1-2 with the following additional requirements.

For this connector clearance and creepage distances shall be measured only in mated position (connector without breaking capacity as defined in IEC 61984:2008).

The connector has protection against electric shock by finger safety (IP2X or IPXXB), both in the mated or unmated condition, after mounting (see also 6.4.2.2 of IEC 61984:2008). The minimum values for clearance and creepage distances can be found in Table 2.

Table 2 – Clearance and creepage distances

Dimensions in millimetres

Minimum distance between contacts and earth contact		Minimum distance between adjacent contacts	
Creepage	Clearance	Creepage	Clearance
1,0	0,8	1,0	0,8

iTeh Standards (https://standards.iteh.ai) Document Preview
IEC PAS 61076-3-119:2013
https://standards.iteh.ai/catalog/standards/iec/0917a960-e00c-4acd-9a3b-321d7bbf07dc/iec-pas-61076-3-119-2013
Withdrawn

3.5 Current-carrying capacity

The current-carrying capacity shall be measured according to IEC 60512 Test No. 5b and stated by the manufacturer.

3.6 Marking

The marking of the connector and the package shall be in accordance with 2.7 of IEC 61076-1:2006.

The position of the contacts shall by identified by suitable marking. The contact marking shall be on the termination side of the connector (or the connector insert) as long as the size of the component allows the placement there.

4 Dimensional information

4.1 General

Dimensions are given in millimetres; drawings are shown in first angle projection. The shape of the connectors may deviate from those given in the following drawings as long as the specified dimensions are not influenced.