SLOVENSKI STANDARD
SIST ETS 300 009-3 E1:2003

01-december-2003

Digitalno omrežje z integriranimi storitvami (ISDN) – Sistem signalizacije št. 7 – Krmilni del signalizacijske zveze (SCCP) (nepovezavni in povezavni /razred 2/) za podporo mednarodnemu medomrežnemu povezovanju – Abstraktni preskušalni niz (ATS) in delna dodatna informacija za preskušanje izvedbe protokola (PIXIT) – Proforma specifikacija

Integrated Services Digital Network (ISDN); Signalling System No.7; Signalling Connection Control Part (SCCP) (connectionless and connection-oriented class 2) to support international interconnection; Part 3: Abstract Test Suite (ATS) and partial Protocol Implementation eXtra Information for Testing (PIXIT) proforma specification

iTeh STANDARD PREVIEW
(standards.iteh.ai)
SIST ETS 300 009-3 E1:2003
https://standards.iteh.ai/catalog/standards/sist/672add08-ff43-4dfb-9286-229f032f357e/sist-ets-300-009-3-e1-2003

Ta slovenski standard je istoveten z: **ETS 300 009-3 Edition 1**

ICS:

33.080	Digitalno omrežje z integriranimi storitvami (ISDN)	Integrated Services Digital Network (ISDN)

SIST ETS 300 009-3 E1:2003 **en**

2003-01.Slovenski inštitut za standardizacijo. Razmnoževanje celote ali delov tega standarda ni dovoljeno.

SIST ETS 300 009-3 E1:2003

iTeh STANDARD PREVIEW
(standards.iteh.ai)

SIST ETS 300 009-3 E1:2003
https://standards.iteh.ai/catalog/standards/sist/672add08-ff43-4dfb-9286-229f032f357e/sist-ets-300-009-3-e1-2003

SIST ETS 300 009-3 E1:2003

EUROPEAN TELECOMMUNICATION STANDARD

ETS 300 009-3

January 2000

Source: SPS

Reference: DE/SPS-02021

ICS: 33.020

Key words: ATS, PIXIT, ISDN, SCCP, SS7

Integrated Services Digital Network (ISDN); Signalling System No.7; Signalling Connection Control Part (SCCP) (connectionless and connection-oriented class 2) to support international interconnection; Part 3: Abstract Test Suite (ATS) and partial Protocol Implementation eXtra Information for Testing (PIXIT) proforma specification

iTeh STANDARD PREVIEW
(standards.iteh.ai)
SIST ETS 300 009-3 E1:2003
https://standards.iteh.ai/catalog/standards/sist/672add08-ff43-4dfb-9286-

ETSI

European Telecommunications Standards Institute

ETSI Secretariat

Postal address: F-06921 Sophia Antipolis CEDEX - FRANCE
Office address: 650 Route des Lucioles - Sophia Antipolis - Valbonne - FRANCE
Internet: secretariat@etsi.fr - http://www.etsi.org

Tel.: +33 4 92 94 42 00 - Fax: +33 4 93 65 47 16

Copyright Notification: No part may be reproduced except as authorized by written permission. The copyright and the foregoing restriction extend to reproduction in all media.

© European Telecommunications Standards Institute 2000. All rights reserved.

SIST ETS 300 009-3 E1:2003

iTeh STANDARD PREVIEW
(standards.iteh.ai)

SIST ETS 300 009-3 E1:2003
https://standards.iteh.ai/catalog/standards/sist/672add08-ff43-4dfb-9286-229f032f357e/sist-ets-300-009-3-e1-2003

Whilst every care has been taken in the preparation and publication of this document, errors in content, typographical or otherwise, may occur. If you have comments concerning its accuracy, please write to "ETSI Standards Making Support Dept." at the address shown on the title page.

SIST ETS 300 009-3 E1:2003

Contents

Foreword 5

1 Scope 7

2 Normative references 7

3 Definitions and abbreviations 8
3.1 Definitions 8
3.2 Abbreviations 8

4 Abstract test method 9
4.1 Description of ATMs used 9
4.2 Conventions for test components and PCOs 9
4.3 The remote single layer test method 10
4.4 The relay transverse ATM 11

5 Untestable Test purposes 11

Annex A (normative): Protocol Conformance Test Report (PCTR) proforma 12

A.1 Identification summary 12
A.1.1 Protocol conformance test report 12
A.1.2 IUT identification 12
A.1.3 Testing environment 12
A.1.4 Limits and reservations 13
A.1.5 Comments 13

A.2 IUT conformance status 13

A.3 Static conformance summary 13

A.4 Dynamic conformance summary 13

A.5 Static conformance review report 14

A.6 Test campaign report 14

A.7 Observations 14

Annex B (normative): Partial PIXIT proforma 15

B.1 Identification summary 15

B.2 Abstract test suite summary 15

B.3 Test laboratory 16

B.4 Client 17

B.5 System under test 18
B.5.1 SUT identification 18

B.6 Protocol information 18
B.6.1 Protocol identification 18
B.6.2 Configuration to be tested 19
B.6.3 Configuration options 19

iTeh STANDARD PREVIEW
(standards.iteh.ai)
SIST ETS 300 009-3 E1:2003
https://standards.iteh.ai/catalog/standards/sist/672add08-ff43-4dfb-9286-229f032f357e/sist-ets-300-009-3-e1-2003

SIST ETS 300 009-3 E1:2003

B.6.4 Routing information 19
B.6.4.1 Signalling point code 19
B.6.4.2 Signalling link selection 19
B.6.4.3 Subsystem number 20
B.6.4.4 GT translation 20
B.6.5 Sending of messages by the IUT 21
B.6.6 User data PDU field parameters 22
B.6.7 SCCP management 24
B.6.8 Timer values 25
B.6.8.1 Timers used in the SCCP test suite 25
B.6.8.2 Additional timers used in the SCCP test suite 25

Annex C (normative): Test suite structure and test purposes 26

C.1 General 26
C.1.1 Structure 26
C.1.2 Number of test purposes 26
C.1.3 TSS&TP compliance clause 27

C.2 SCCP test purposes 27
C.2.1 Static conformance requirements 27
C.2.2 Dynamic conformance requirements 33
C.2.2.1 SCCP connectionless 33
C.2.2.1.1 Routing 33
C.2.2.1.2 Data transfer 41
C.2.2.2 SCCP management 44
C.2.2.3 SCCP connection-oriented 45

C.3 ATS to TP map 51

Annex D (normative): Abstract test suite 58

D.1 The TTCN Graphical form (TTCN.GR) 58

D.2 The TTCN Machine Processable form (TTCN.MP) 58

Annex E (informative): Nomenclature, guidelines and conventions 59

E.1 SCCP nomenclature 59
E.1.1 Declarations Part 59
E.1.2 Constraints part 60
E.1.3 Dynamic behaviour 60

E.2 Conventions for the use of TTCN 60
E.2.1 Programming style conventions 60
E.2.1.1 General conventions 61
E.2.1.2 Declarations Part 61
E.2.1.3 Constraints Part 62
E.2.1.4 Dynamic Part 62
E.2.2 Implementation dependent conventions 62

E.3 SCCP specific guidelines 63
E.3.1 Test Suite Overview 63
E.3.2 Declarations Part 63
E.3.3 Constraints Part 63
E.3.4 Dynamic Part 64

History 65

iTeh STANDARD PREVIEW
(standards.iteh.ai)
SIST ETS 300 009-3 E1:2003
https://standards.iteh.ai/catalog/standards/sist/672add08-ff43-4dfb-9286-
SIST ETS 300 009-3 E1:2003

SIST ETS 300 009-3 E1:2003

Foreword

This European Telecommunication Standard (ETS) has been produced by the Signalling Protocols and Switching (SPS) Technical Committee of the European Telecommunications Standards Institute (ETSI).

This ETS is part 3 of a multi-part ETS covering the Signalling System No.7 Signalling Connection Control Part (SCCP) to support international interconnection as described below:

Part 1: "Protocol specification [ITU-T Recommendations Q.711 to Q.716 (1996), modified]";

Part 2: "Protocol Implementation Conformance Statement (PICS) proforma specification";

Part 3: "Abstract Test Suite (ATS) and partial Protocol Implementation eXtra Information for Testing (PIXIT) proforma specification".

Transposition dates	
Date of adoption of this ETS:	31 December 1999
Date of latest announcement of this ETS (doa):	31 March 2000
Date of latest publication of new National Standard or endorsement of this ETS (dop/e):	30 September 2000
Date of withdrawal of any conflicting National Standard (dow):	30 September 2000

iTeh STANDARD PREVIEW
(standards.iteh.ai)
SIST ETS 300 009-3 E1:2003
https://standards.iteh.ai/catalog/standards/sist/672add08-ff43-4dfb-9286-229f032f357e/sist-ets-300-009-3-e1-2003

SIST ETS 300 009-3 E1:2003

Blank page

iTeh STANDARD PREVIEW
(standards.iteh.ai)
SIST ETS 300 009-3 E1:2003
https://standards.iteh.ai/catalog/standards/sist/672add08-ff43-4dfb-9286-229f032f357e/sist-ets-300-009-3-e1-2003

SIST ETS 300 009-3 E1:2003

1 Scope

This third part of ETS 300 009 specifies the Abstract Test Suite (ATS) and partial Protocol Implementation eXtra Information for Testing (PIXIT) proforma for the Signalling Connection Control Part (SCCP) for implementations conforming to ITU-T Recommendations Q.711 to Q.714 and Q.716 as modified by ETS 300 009-1 [1]. The Test Suite Structure and Test Purposes (TSS&TP) related to this ATS and partial PIXIT proforma specification are specified in annex B and C of the present document.

The test cases validate Classes 0, 1 and 2 SCCP procedures by monitoring and analysing SCCP messages and their contents.

Testing of SCCP connection-oriented protocol Class 3 is out of the scope of this ETS.

ISO/IEC 9646-1 [4], ISO/IEC 9646-2 [5], ISO/IEC 9646-3 [6], ISO/IEC 9646-4 [7] and ISO/IEC 9646-5 [8] and ETS 300 406 [3] are used as the basis for the test methodology.

2 Normative references

This ETS incorporates by dated and undated reference, provisions from other publications. These normative references are cited at the appropriate places in the text and the publications are listed hereafter. For dated references, subsequent amendments to or revisions of any of these publications apply to this ETS only when incorporated in it by amendment or revision. For undated references the latest edition of the publication referred to applies.

[1] ETS 300 009-1 (1996): "Integrated Services Digital Network (ISDN); Signalling System No.7; Signalling Connection Control Part (SCCP) (connectionless and connection-oriented class 2) to support international interconnection; Part 1: Protocol specification [ITU-T Recommendations Q.711 to Q.714 and Q.716 (1993), modified]".

[2] EN 300 009-2 (1996): "Integrated Services Digital Network (ISDN); Signalling System No.7; Signalling Connection Control Part (SCCP) (connectionless and connection-oriented class 2) to support international interconnection; Part 2: Protocol Implementation Conformance Statement (PICS) proforma specification".

[3] ETS 300 406 (1995): "Methods for Testing and Specification (MTS); Protocol and profile conformance testing specifications; Standardization methodology".

[4] ISO/IEC 9646-1: "Information technology - Open Systems Interconnection - Conformance testing methodology and framework - Part 1: General concepts".

[5] ISO/IEC 9646-2: "Information technology - Open Systems Interconnection - Conformance testing methodology and framework - Part 2: Abstract Test Suite specification".

[6] ISO/IEC 9646-3: "Information technology - Open Systems Interconnection - Conformance testing methodology and framework - Part 3: The Tree and Tabular Combined Notation (TTCN)".

[7] ISO/IEC 9646-4: "Information technology - Open Systems Interconnection - Conformance testing methodology and framework - Part 4: Test realization".

[8] ISO/IEC 9646-5: "Information technology - Open Systems Interconnection - Conformance testing methodology and framework - Part 5: Requirements on test laboratories and clients for the conformance assessment process".

[9] ITU-T Recommendation Q.786 (1993): "SCCP test specification".

iTeh STANDARD PREVIEW
(standards.iteh.ai)
SIST ETS 300 009-3 E1:2003
https://standards.iteh.ai/catalog/standards/sist/672add08-ff43-4dfb-9286-229f032f357e/sist-ets-300-009-3-e1-2003

SIST ETS 300 009-3 E1:2003

[10] ETS 300 008-1 (1996): "Integrated Services Digital Network (ISDN); Signalling System No.7; Message Transfer Part (MTP) to support international interconnection; Part 1: Protocol specification [ITU-T Recommendations Q.701 (1993), Q.702 (1988), Q.703 to Q.706 (1993), modified]".

3 Definitions and abbreviations

3.1 Definitions

For the purposes of this ETS, the following definitions apply:

Abstract (N-)Service Primitive ((N-)ASP): see ISO/IEC 9646-1 [4].

Abstract Test Suite (ATS): see ISO/IEC 9646-1 [4].

Implementation Under Test (IUT): see ISO/IEC 9646-1 [4].

Means Of Testing (MOT): see ISO/IEC 9646-1 [4].

Protocol Conformance Test Report (PCTR): see ISO/IEC 9646-1 [4].

Protocol Implementation Conformance Statement (PICS): see ISO/IEC 9646-1 [4].

PICS proforma: see ISO/IEC 9646-1 [4].

Protocol Implementation eXtra Information for Testing (PIXIT): see ISO/IEC 9646-1 [4].

PIXIT proforma: see ISO/IEC 9646-1 [4].

iTeh STANDARD PREVIEW
(standards.iteh.ai)

System Under Test (SUT): see ISO/IEC 9646-1 [4].

3.2 Abbreviations

SIST ETS 300 009-3 E1:2003
https://standards.iteh.ai/catalog/standards/sist/672add08-ff43-4dfb-9286-[illegible]009-3-e1-2003

For the purposes of this ETS, the following abbreviations apply:

AL	ALlowed
ATM	Abstract Test Method
ATS	Abstract Test Suite
BC	BroadCast
CAP	CAPability test
CC	Connection Confirm
Cda	Called address
Cga	Calling address
CL	ConnectionLess
CL0	Protocol Class 0
CL1	Protocol Class 1
CR	Connection Request
CSE	Co-ordinated State change
DCR	Dynamic Conformance Requirement
DP	DPC included
DPC	Destination Point Code
DT	Data Transfer
GT	Global Title
IB	Inopportune Behaviour
IC	Implementation Class
IUT	Implementation Under Test
LTs	Lower Testers
MA	MAnagement
MFM	Message From MTP
MFS	Message From SCCP
MML	Man Machine Language
MOT	Means Of Testing

SIST ETS 300 009-3 E1:2003

MTC	Main Test Component
MTP	Message Transfer Part
ND	DPC not included
NG	Not route on GT
OG	route On GT
OPC	Originating Point Code
PCO	Point of Control and Observation
PICS	Protocol Implementation Conformance Statement
PIXIT	Protocol Implementation eXtra Information for Testing
PR	PRohibited
PTC	Parallel Test Component
REL	RELease
RS	Remote Single layer
RT	RouTeing
SB	Syntactically invalid Behaviour
SCCP	Signalling Connection Control Part
SCR	Static Conformance Requirement
SCS	System Conformance Statement
SLS	Signalling Link Selection
SOG	Subsystem Out of service Grant
SOR	Subsystem Out of service Request
SP	Signalling Point
SR	Segmentation and Reassembly
SS	SubSystem
SSA	SubSystem Allowed
SSN	SubSystem Number
SSP	SubSystem Prohibited
SST	Subsystem Status Test
ST	Setup
ST	Status Test
SUT	System Under Test
TSS&TP	Test Suite Structure and Test Purposes
UDT	UnitDaTa
UDTS	UnitDaTa Service
VB	Valid Behaviour
XUDT	eXtended UnitDaTa
XUDTS	eXtended UnitDaTa Service
YT	Relay Transverse

iTeh STANDARD PREVIEW
(standards.iteh.ai)
SIST ETS 300 009-3 E1:2003
https://standards.iteh.ai/catalog/standards/sist/672add08-ff43-4dfb-9286-229f032f357e/sist-ets-300-009-3-e1-2003

4 Abstract test method

4.1 Description of ATMs used

Within this ATS, two ATMs are used. These are the RS and the YT test methods. Their applicability depends on the IUT's functionality and capabilities.

Some of the described tests may not be required to be executed since the respective functionality is not included in the IUT (the implemented functionalities should be described in the completed PICS proforma, see EN 300 009-2 [2]). In such a case, the non-execution of these specific tests should not be regarded as a non-conformance statement.

IUTs which are to be tested using this ATS are required to have previously been tested for conformity against and passed the test suites for ETS 300 008-1 [10].

4.2 Conventions for test components and PCOs

SCCP communication is required between the SPs used in the test configurations. Two configurations are required to perform all these tests. It should be possible that a SP can be a primary/backup node for another SP. Furthermore, it should be possible that the SPs contain concerned SSs. All SPs should be in the same MTP network. There should be one SPC for the IUT (SP A), containing two different SSNs, and two SPCs, with one SSN each, for each test component (SP B, SP C).

SIST ETS 300 009-3 E1:2003

SP_B and SP_C contain LTs B and C, respectively. An operator above the IUT is required in some cases to answer to implicit send requesting the emission of messages or to apply MA command on the configuration of the SUT. The MA procedures are requested with message including MML commands. The contents of those message have to be fulfilled in this PIXIT and depends of the IUT. The lower interface of the IUT is reached via the LTs and the service provider. LT_B, LT_C, SUT_MML are all PCOs.

The ATS is based on multi party test method. Thus the test system is made up one Main Test Component (MTC) and eventually a Parallel Test Component (PTC) in test configuration for relay node.

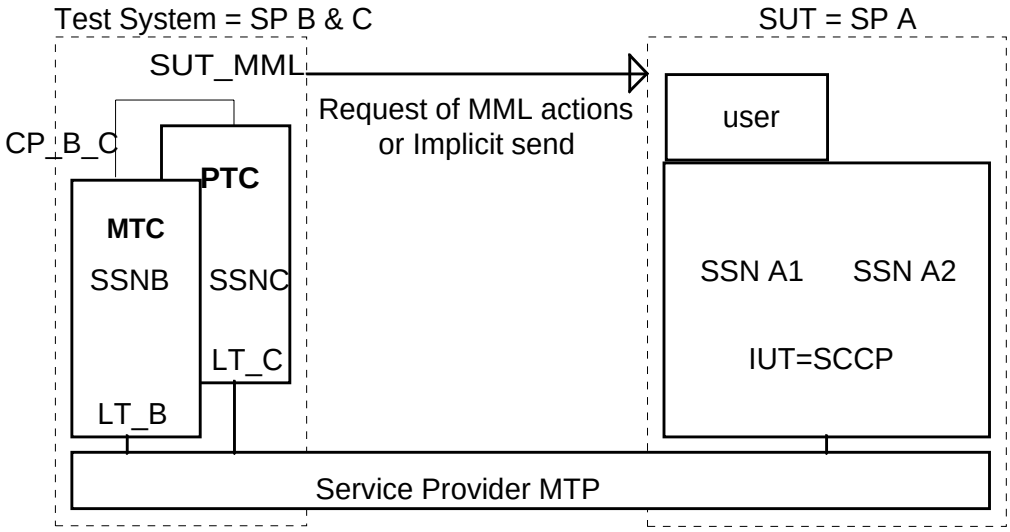

Figure 1: General test configuration with its PCOs

iTeh STANDARD PREVIEW
(standards.iteh.ai)

4.3 The remote single layer test method

SP A is the SUT and requires in case of the RS method needs no additional requirements from the SUT. However, sometimes a SCCP operator should be available to trigger the IUT and to apply requested command (MML). The arrows in figure 2 indicate an SCCP relation.

SIST ETS 300 009-3 E1:2003
https://standards.iteh.ai/catalog/standards/sist/672add08-ff43-4dfb-9286-239f032f357e/sist-ets-300-009-3-e1-2003

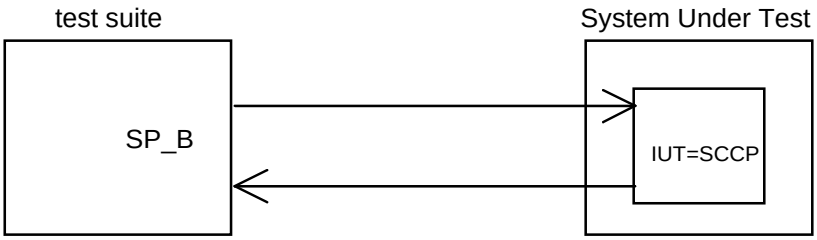

Figure 2: Configuration for the RS

SIST ETS 300 009-3 E1:2003

4.4 The relay transverse ATM

SP A is the SUT and is used as a relay point (see figure 3). The arrows indicate an SCCP relation. All SPs are in the same MTP network. MTC and PTC synchronized themselves by exchanging message at co-ordination point CP_B_C. The test case is stopped and the final verdict is set by the MTC.

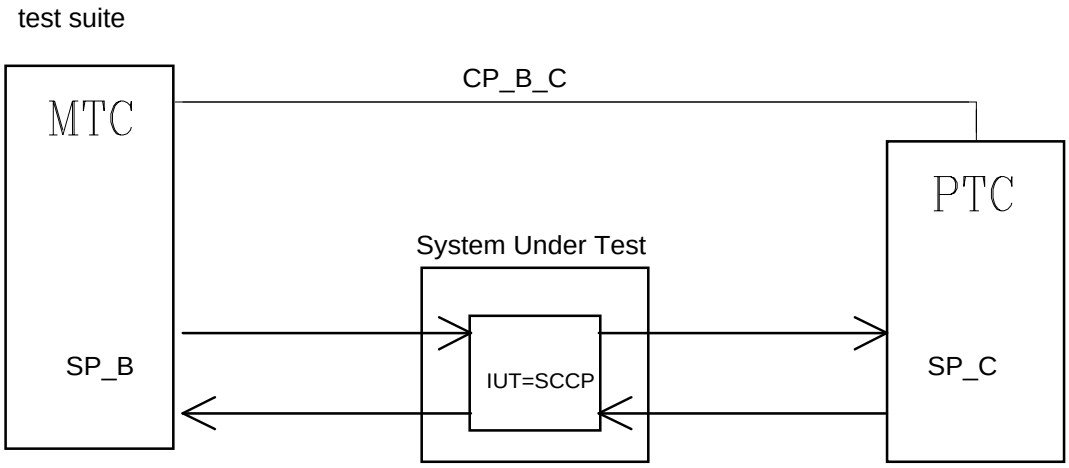

Figure 3: Configuration for the YT method

5 Untestable Test purposes

No upper tester has been defined in the standard protocol. Consequently, test purposes that cannot be tested without upper tester have been considered as untestable. This concerns mainly test purpose that check local procedure or the behaviour of the IUT concerning the use SCCP's ASP.

iTeh STANDARD PREVIEW
(standards.iteh.ai)
SIST ETS 300 009-3 E1:2003
https://standards.iteh.ai/catalog/standards/sist/672add08-ff43-4dfb-9286-229f032f357e/sist-ets-300-009-3-e1-2003

SIST ETS 300 009-3 E1:2003

Annex A (normative): Protocol Conformance Test Report (PCTR) proforma

Notwithstanding the provisions of the copyright clause related to the text of this ETS, ETSI grants that users of this ETS may freely reproduce the PCTR proforma in this annex so that it can be used for its intended purposes and may further publish the completed PCTR.

A.1 Identification summary

A.1.1 Protocol conformance test report

PCTR number:	
PCTR date:	
Corresponding SCTR number:	
Corresponding SCTR date:	
Test laboratory identification:	
Test laboratory manager:	
Signature:	

iTeh STANDARD PREVIEW
(standards.iteh.ai)

A.1.2 IUT identification

Name:	
Version:	
Protocol specification:	ETS 300 009-1
PICS:	
Previous PCTRs (if any)	

SIST ETS 300 009-3 E1:2003
https://standards.iteh.ai/catalog/standards/sist/672add08-ff43-4dfb-9286-229f032f357e/sist-ets-300-009-3-e1-2003

A.1.3 Testing environment

PIXIT Reference number:	
ATS Specification:	ETS 300 009-3
ATM:	Multi-party test method (see ISO/IEC 9646-2)
MOT identification:	
Dates of testing:	
Conformance log reference(s):	
Retention date for log reference(s):	

SIST ETS 300 009-3 E1:2003

A.1.4 Limits and reservations

Additional information relevant to the technical contents or further use of the test report, or to the rights and obligations of the test laboratory and the client, may be given here. Such information may include restriction on the publication of the report.

.....

.....

.....

.....

A.1.5 Comments

Additional comments may be given by either the client or the test laboratory on any of the contents of the PCTR, for example, to note disagreement between the two parties.

.....

.....

.....

.....

A.2 IUT conformance status

iTeh STANDARD PREVIEW
(standards.iteh.ai)

This IUT has/has not been shown by conformance assessment to be non-conforming to the specified protocol specification.

SIST ETS 300 009-3 E1:2003
https://standards.iteh.ai/catalog/standards/sist/672add08-ff43-4dfb-9286-229f032f357e/sist-ets-300-009-3-e1-2003

Strike the appropriate words in this sentence. If the PICS for this IUT is consistent with the SCRs (as specified in clause A.3 of this report) and there are no "FAIL" verdicts to be recorded (in clause A.6) strike the words "has or", otherwise strike the words "or has not".

A.3 Static conformance summary

The PICS for this IUT is / is not consistent with the *SCR*s in the specified protocol.

Strike the appropriate words in this sentence.

A.4 Dynamic conformance summary

The test campaign did/did not reveal errors in the IUT.

Strike the appropriate words in this sentence. If there are no "FAIL" verdicts to be recorded (in clause A.6 of this report) strike the word "did", otherwise strike the words "did not".

Summary of the results of groups of tests:

.....

.....

.....

.....

.....