# SLOVENSKI PREDSTANDARD

# OSIST prEN 12183:2004

oktober 2004

Manual wheelchairs - Requirements and test methods



ICS 11.180.10

Referenčna številka
OSIST prEN 12183:2004(en;fr;de)

EUROPEAN STANDARD
NORME EUROPÉENNE
EUROPÄISCHE NORM

**DRAFT**
**prEN 12183**

August 2004

ICS

Will supersede EN 12183:1999

English version

# Manual wheelchairs - Requirements and test methods

Rollstühle mit Muskelkraftantrieb - Anforderungen und Prüfverfahren

This draft European Standard is submitted to CEN members for enquiry. It has been drawn up by the Technical Committee CEN/TC 293.

If this draft becomes a European Standard, CEN members are bound to comply with the CEN/CENELEC Internal Regulations which stipulate the conditions for giving this European Standard the status of a national standard without any alteration.

This draft European Standard was established by CEN in three official versions (English, French, German). A version in any other language made by translation under the responsibility of a CEN member into its own language and notified to the Management Centre has the same status as the official versions.

CEN members are the national standards bodies of Austria, Belgium, Cyprus, Czech Republic, Denmark, Estonia, Finland, France, Germany, Greece, Hungary, Iceland, Ireland, Italy, Latvia, Lithuania, Luxembourg, Malta, Netherlands, Norway, Poland, Portugal, Slovakia, Slovenia, Spain, Sweden, Switzerland and United Kingdom.

**Warning** : This document is not a European Standard. It is distributed for review and comments. It is subject to change without notice and shall not be referred to as a European Standard.



EUROPEAN COMMITTEE FOR STANDARDIZATION
COMITÉ EUROPÉEN DE NORMALISATION
EUROPÄISCHES KOMITEE FÜR NORMUNG

**Management Centre: rue de Stassart, 36 B-1050 Brussels**



Ref. No. prEN 12183:2004: E

# Contents

Page

## Foreword

This document (prEN 12183:2004) has been prepared by Technical Committee CEN/TC 293 "Technical aids and systems for disabled persons", the secretariat of which is held by SIS.

This document is currently submitted to the CEN Enquiry.

This document will supersede EN 12183:1999.

This document has been prepared under a mandate given to CEN by the European Commission and the European Free Trade Association, and supports essential requirements of EU Directive 93/42/EEC of June 1993 concerning medical devices.

For relationship with EU Directive(s), see informative Annex ZA, which is an integral part of this document.

## Introduction

This is the first revision of this standard which was originally issued in 1999.

Where this standard does not apply to particular wheelchairs, contracting parties should consider if appropriate parts of this standard can be used. Manufacturers may also wish to consider if appropriate parts of this standard can be used to assess the performance of their products against the Essential Requirements of the Council Directive concerning medical devices 93/42/EEC of 14 June 1993.

This standard contains requirements for ergonomic design related to the ease of wheelchair operation. They are intended to be applicable to at least 80% of adult users and are based upon:

— the body size of users within the range 5th percentile adult female to 95th percentile adult male;

— the abilities and restrictions of a 65 year old 50th percentile female;

— the wheelchair being equipped with operating devices which are not custom-made for individual users.

## 1 Scope

This European Standard specifies requirements and test methods for manual wheelchairs intended to carry one person.

It also specifies requirements and test methods for manual wheelchairs with electrically powered ancillary equipment.

This European Standard does not apply in total to:

— wheelchairs intended for special purposes, such as sports, showering, toileting;

— custom-made wheelchairs;

— stand-up wheelchairs;

— add-on power kits for the propulsion of manual wheelchairs.

NOTE The requirements for electrically powered wheelchairs is specified in EN 12184:XXXX.

## 2 Normative references



The following referenced documents are indispensable for the application of this document. For dated references, only the edition cited applies. For undated references, the latest edition of the referenced document (including any amendments) applies.

EN ISO 14971:2000, *Medical devices — Application of risk management to medical devices*

EN 1021-1, *Furniture assessment of the ignitability of upholstered furniture-Ignition source: smouldering cigarette*



EN 1021-2, *Furniture.assessment of the ignitability of upholstered furniture-Ignition source: match flame equivalent*

EN 12182:1999, *Technical aids for disabled persons — General requirements and test methods*

ISO 68-1:1998, ISO *general purpose screw threads — Basic profile — Part 1: Metric screw threads*

ISO 7176-1:1999, *Wheelchairs — Part 1: Determination of static stability*

ISO 7176-3:2003, *Wheelchairs — Part 3: Determination of effectiveness of brakes*

ISO 7176-5-1986, *Wheelchairs — Part 5: Determination of overall dimensions, mass and turning space*

ISO 7176-7:1998, *Wheelchairs — Part 7: Measurement of seating and wheel dimensions*

ISO 7176-8:1998, *Wheelchairs — Part 8: Requirements and test methods for static, impact and fatigue strengths*

ISO 7176-11:1992, *Wheelchairs — Part 11: Test dummies*

ISO 7176-13:1989, *Wheelchairs — Part 13: Determination of coefficient of friction of test surfaces*

ISO 7176-15:1996, *Wheelchairs — Part 15: Requirements for informative disclosure, documentation and labelling*

ISO 7176-19:2001, *Wheelchairs — Part 19: Wheeled mobility devices for use in motor vehicles*

ISO 7176-22:2000, *Wheelchairs — Part 22: Set-up procedures*

ISO DIS 7176-26:2003, *Wheelchairs — Nomenclature, terms and definitions*

ISO FDIS 10542-5:2004, *Technical systems and aids for disabled or handicapped persons — Wheelchair tiedown and occupant restraint systems — Part 5: Systems for specific wheelchairs*

## 3 Terms and definitions

For the purposes of this European Standard the terms and definitions given in ISO DIS 7176-26:2003 (with the exception of the definition of wheelchair which is replaced by 3.5 below), EN 12182:1999 and the following apply.

**3.1**
**ground clearance**
height of free space below the occupied wheelchair

NOTE The ground clearance is an indication for the capability of the wheelchair to negotiate obstacles.

**3.2**
**loaded wheelchair**
wheelchair loaded with a dummy as specified in 4.8 or loaded with a human test occupant

**3.3**
**maximum safe slope**
maximum slope specified by the manufacturer on which the wheelchair can operate safely including climbing, traversing and descending slopes

**3.4**
**seat reference point**
intersection of the seat reference plane and the back support reference plane at half the width of the seat (see Figure 1)

NOTE The seat reference plane and the back support reference plane are specified in ISO 7176-7:1998.

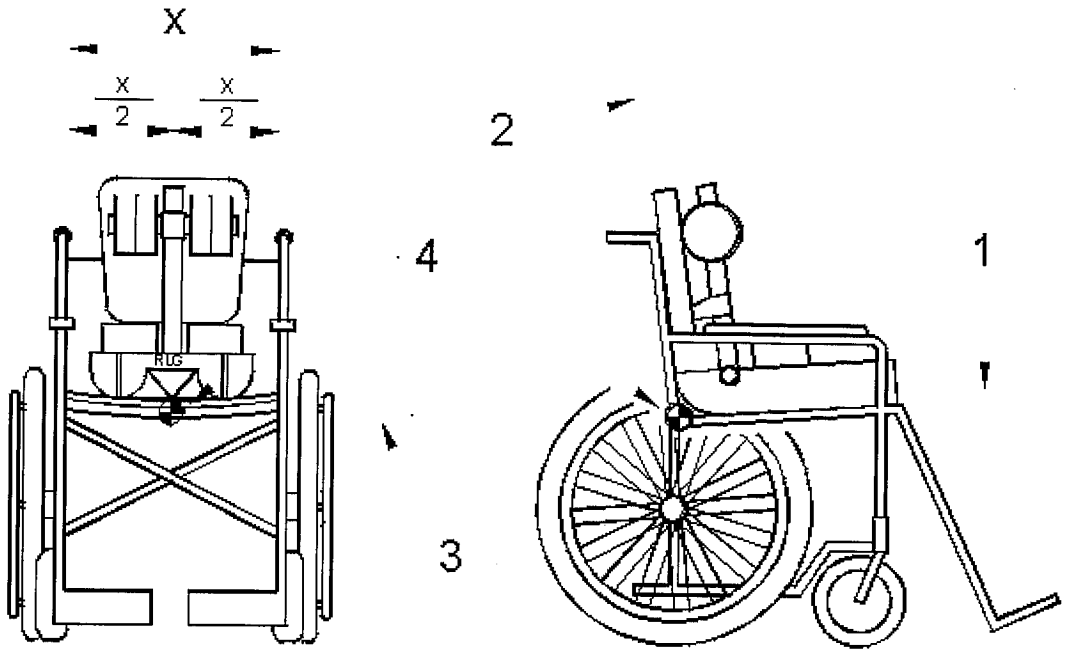

Key:

| | |
|---|---|
| 1 | seat reference plane |
| 2 | back support reference plane |
| 3 | intersection line between seat reference plane and back support reference plane |
| 4 | seat reference point |

Figure 1 — Seat reference point

**3.5**
**wheelchair**
manual wheelchair covered by the scope of this standard, to which the requirements and test methods are applied

## 4 Test apparatus

**4.1 Adjustable test plane**, a flat, rigid plane with an adjustable slope, with a coefficient of friction as defined in ISO 7176-13:1989, of sufficient size to accommodate the wheelchair during the tests specified in 7.2 and 7.4 and such that the whole surface lies between two imaginary parallel planes 5 mm apart per 1000 mm of extension in any direction and 25 mm apart per 6000 mm of extension in any direction.

**4.2 Flat, horizontal test plane** with a coefficient of friction as defined in ISO 7176-13:1989, of sufficient size to accommodate the wheelchair under test, and such that the whole surface lies between two imaginary horizontal planes 5 mm apart per 1000 mm of extension in any direction and 25 mm apart per 6000 mm of extension in any direction.

**4.3 Means to apply a force** between 25 N and 200 N with an accuracy of ± 2% and an application rate less than 5 N/s.

**4.4 Means to measure force** with an accuracy of ± 2 N in increments of 1 N in the range of 0 N to 200 N.

**4.5 Means to measure distance** to an accuracy of ± 2%.

**4.6 Means to measure angles** to an accuracy of ± 0,1°.

**4.7 Supplementary weights** to add to a human test driver to achieve the maximum user mass as specified by the manufacturer and to achieve a similar mass distribution to the dummy to be used as specified in 4.8

**4.8 Test dummy** as specified in ISO 7176-11:1992 of mass equal to the maximum occupant mass specified by the manufacturer up to 100 kg.

If there is no dummy of equal mass, use the dummy of the next greater size.

If the maximum occupant mass specified by the manufacturer is greater than 100 kg use an augmentation to the 100 kg test dummy from ISO 7176-11:1992 as specified below.

where $M$ is the total mass of the required dummy

**4.8.1** The theoretical head and upper torso mass does not increase from the 100 kg dummy.

Mass of head = 7,9 kg

Mass of upper torso = 21,6 kg

**4.8.2** The theoretical lower torso mass is obtained from the following:

Lower torso mass = $0{,}83M - 51{,}8$ kg

**4.8.3** The additional lower torso mass is obtained from the following:

Lower torso mass = $0{,}83M - 83$ kg

**4.8.4** The Y axis for the centre of mass for the torso mass is obtained from the following:

Y axis measured from the base of the seat of the dummy = $\dfrac{22{,}1M + 823}{M - 26{,}9}$ (cm)

Y axis measured from the pivot point of the dummy = $\dfrac{22{,}1M + 823}{M - 26{,}9} - 4{,}8$ (cm)



**4.8.5** The Y axis of the centre of mass (com) of the additional torso mass is obtained from the following:

$$\frac{\left[61 + \frac{5}{6}(M - 100)\right] \times 28{,}8 - (61 \times 29{,}8)}{\frac{5}{6}(M - 100)} \text{ (cm)}$$

**4.8.6** The X axis centre for the centre of mass for the additional torso mass measured from the front face of the 100 kg torso is obtained from the following:

X axis from front face of 100 kg dummy = $\dfrac{0{,}14M^2 - 6{,}8M - 731{,}4}{\frac{5}{6}(M - 100)} - 25{,}1$ (cm)

**4.8.7** The additional mass of the upper legs is obtained from the following:

Upper legs additional mass = $0{,}17M - 17$ kg

**4.8.8** The additional mass for the upper leg is evenly distributed so as not to change the centre of mass for this segment.

**4.8.9** The mass of the lower legs/feet does not increase from the 100 kg dummy.

**4.9** **Means to measure speed** between 0 km/h and 6 km/h to an accuracy of ± 5%.

## 5 General requirements

The wheelchair shall conform to the requirements as specified in EN 12182:1999 for the following:

— intended performance and technical documentation;

— aids that can be dismantled;

— single use fasteners;

— biocompatibility and toxicity;

— contaminants and residues;

— infection and microbiological contamination;

— overflow, spillage, leakage and ingress of liquids;

— safety of moving parts;

— prevention of traps for parts of human body;

— folding and adjusting mechanisms;

— surfaces, corners and edges;

— risk analysis.



NOTE The risk analysis requirement in EN 12182:1999 refers to EN 1441:1997 which has been withdrawn and superseded by EN ISO 14971.

## 6 Design requirements

Unless otherwise specified in this clause, the wheelchair shall be prepared as specified in ISO 7176-22:2000 for each test.

### 6.1 Foot supports and leg supports

#### 6.1.1 Requirements

The wheelchair shall be capable of being fitted with a means of positioning the user's feet at the required height, and preventing the user's feet from sliding backwards.

Foot supports and leg supports that can be adjusted or moved from one position to another shall have provision to be fixed securely in any operating position.

Foot supports and leg supports that can be adjusted in increments shall have increment adjustments not exceeding 25 mm.

When tested as specified in 6.1.2 wheelchairs fitted with a separate foot support for each foot shall:

a) have a gap between the foot supports that does not exceed

— 35 mm if intended for adults;

— 25 mm if intended for children;

or

b) be fitted with a means to prevent the occupant's feet from sliding into the gap between the foot supports.

### 6.1.2 Test method for foot supports

a) Simultaneously apply a force $f$ + 5 N – 0 N to the centroid of each foot support normal to the plane of the unloaded foot support. In cases where the foot support has no identifiable plane, apply the force within 5° of vertical. The force $f$ is calculated from the following expression:

$f = 1.25 \times M$

where

$f$ is the force in Newtons applied to each foot support

$M$ is the maximum user mass in kilograms specified by the manufacturer

b) Measure the shortest distance between the foot supports.



## 6.2 Pneumatic tyres

If the wheelchair is fitted with pneumatic tyres, they shall have the same type of valve connection on all tyres.

The tyres or the rims shall have the recommended pressure range shown.

## 6.3 Fitting an anterior pelvic support



The wheelchair shall have provision for an anterior pelvic support to be fitted.

## 6.4 Static loading of arm supports and back supports

When the maximum occupant mass specified by the manufacturer does not exceed 100 kg, arm supports and back supports shall conform to the static loading requirements of ISO 7176-8:1998 in all intended incremental operating positions with the exception of the upward force on a push handle which shall be 880 N. For continuously variable operating positions test at the most upright position, the mid-point adjusted (or nearest) position and the least upright position.

NOTE The upward force is a correction of the value for upward force on push handles stated in Table 8 of ISO 7176-8:1998.

For occupant mass greater than 100 kg specified by the manufacturer the appropriate dummy as specified in 4.8 and the forces shown in Table 2 replace the forces specified in ISO 7176-8:1998.

## 6.5 Wheelchairs for use as seats in motor vehicles

If the manufacturer specifies that the intended use of the wheelchair includes use by an adult as a seat in a motor vehicle, the wheelchair shall conform to the performance requirements of ISO 7176-19:2001.

If the manufacturer specifies that the intended use of the wheelchair includes use as a seat in a motor vehicle by a child of mass greater than 22 kg, the wheelchair shall conform to the performance requirements of ISO