SLOVENSKI STANDARD
SIST EN 4563:2004

01-maj-2004

Aerospace series - Pipe coupling, welded, in heat resisting steel - Tees - Inch series

Aerospace series - Pipe coupling, welded, in heat resisting steel - Tees - Inch series

Luft- und Raumfahrt - Rohrverschraubung zum Anschweißen aus hochwarmfestem Stahl - T-Stutzen - Inch-Reihe

Ta slovenski standard je istoveten z: EN 4563:2003

ICS:

49.080	Letalski in vesoljski hidravliļ ni sistemi in deli	Aerospace fluid systems and components

SIST EN 4563:2004 **en**

EUROPEAN STANDARD

NORME EUROPÉENNE

EUROPÄISCHE NORM

EN 4563

February 2003

ICS 49.080

English version

Aerospace series - Pipe coupling, welded, in heat resisting steel - Tees - Inch series

This European Standard was approved by CEN on 14 September 2002.

CEN members are bound to comply with the CEN/CENELEC Internal Regulations which stipulate the conditions for giving this European Standard the status of a national standard without any alteration. Up-to-date lists and bibliographical references concerning such national standards may be obtained on application to the Management Centre or to any CEN member.

This European Standard exists in three official versions (English, French, German). A version in any other language made by translation under the responsibility of a CEN member into its own language and notified to the Management Centre has the same status as the official versions.

CEN members are the national standards bodies of Austria, Belgium, Czech Republic, Denmark, Finland, France, Germany, Greece, Hungary, Iceland, Ireland, Italy, Luxembourg, Malta, Netherlands, Norway, Portugal, Slovak Republic, Spain, Sweden, Switzerland and United Kingdom.

EUROPEAN COMMITTEE FOR STANDARDIZATION
COMITÉ EUROPÉEN DE NORMALISATION
EUROPÄISCHES KOMITEE FÜR NORMUNG

Management Centre: rue de Stassart, 36 B-1050 Brussels

Ref. No. EN 4563:2003 E

Contents

Foreword 3
1 Scope 3
2 Normative references 3
3 Required characteristics 4
3.1 Configuration – Dimensions – Tolerances – Masses 4
3.2 Materials 4
4 Designation 9
5 Marking 9
6 Technical specification 9

Foreword

This document EN 4563:2003 has been prepared by the European Association of Aerospace Manufacturers (AECMA).

After enquiries and votes carried out in accordance with the rules of this Association, this Standard has received the approval of the National Associations and the Official Services of the member countries of AECMA, prior to its presentation to CEN.

This European Standard shall be given the status of a national standard, either by publication of an identical text or by endorsement, at the latest by August 2003, and conflicting national standards shall be withdrawn at the latest by August 2003.

According to the CEN/CENELEC Internal Regulations, the national standards organizations of the following countries are bound to implement this European Standard : Austria, Belgium, Czech Republic, Denmark, Finland, France, Germany, Greece, Hungary, Iceland, Ireland, Italy, Luxembourg, Malta, Netherlands, Norway, Portugal, Slovakia, Spain, Sweden, Switzerland and United Kingdom.

1 Scope

This standard specifies the characteristics of welded tees for inch series pipe couplings, in heat resisting steel, for aerospace applications.

Nominal pressure : Class D per ISO 6771

2 Normative references

This European Standard incorporates by dated or undated reference, provisions from other publications. These normative references are cited at the appropriate places in the text and the publications are listed hereafter. For dated references, subsequent amendments to or revisions of any of these publications apply to this European Standard only when incorporated in it by amendment or revision. For undated references the latest edition of the publication referred to applies (including amendments).

ISO 6771 *Aerospace - Fluid systems and components - Pressure and temperature classifications.*

EN 2424 *Aerospace series - Marking of aerospace products.*

EN 3363 *Aerospace series - Steel FE-CM38 - Solution treated - $R_m \geq 485$ MPa - Sand or investment casting*[1)].

EN 3468 *Aerospace series - Steel FE-PA13 - Softened - $500 \leq R_m \leq 700$ MPa - Forgings - $D_e \leq 100$ mm* [1)].

EN 3487 *Aerospace series - Steel FE-PA13 - Softened - $500 \leq R_m \leq 700$ MPa - Bars for machining - $D_e \leq 100$ mm* [1)].

EN 4549 *Aerospace series - Pipe coupling, in heat resisting steel or in heat resisting nickel alloy - Coupling end, welded - Design configuration - Inch series.*

1) Published as AECMA Prestandard at the date of publication of this standard

EN 4560 *Aerospace series - Pipe coupling, 37°, spherical, up to 21 000 kPa - Inch series - Technical specification.*

3 Required characteristics

3.1 Configuration – Dimensions – Tolerances – Masses

See Figures 1 and 2 and Tables 1 to 3. Dimensions and tolerances are in millimetres.

Table 1

Code	Weld end option
1	weld end on one side
2	weld end on both sides

3.2 Materials

EN 3363 or EN 3468 or EN 3487

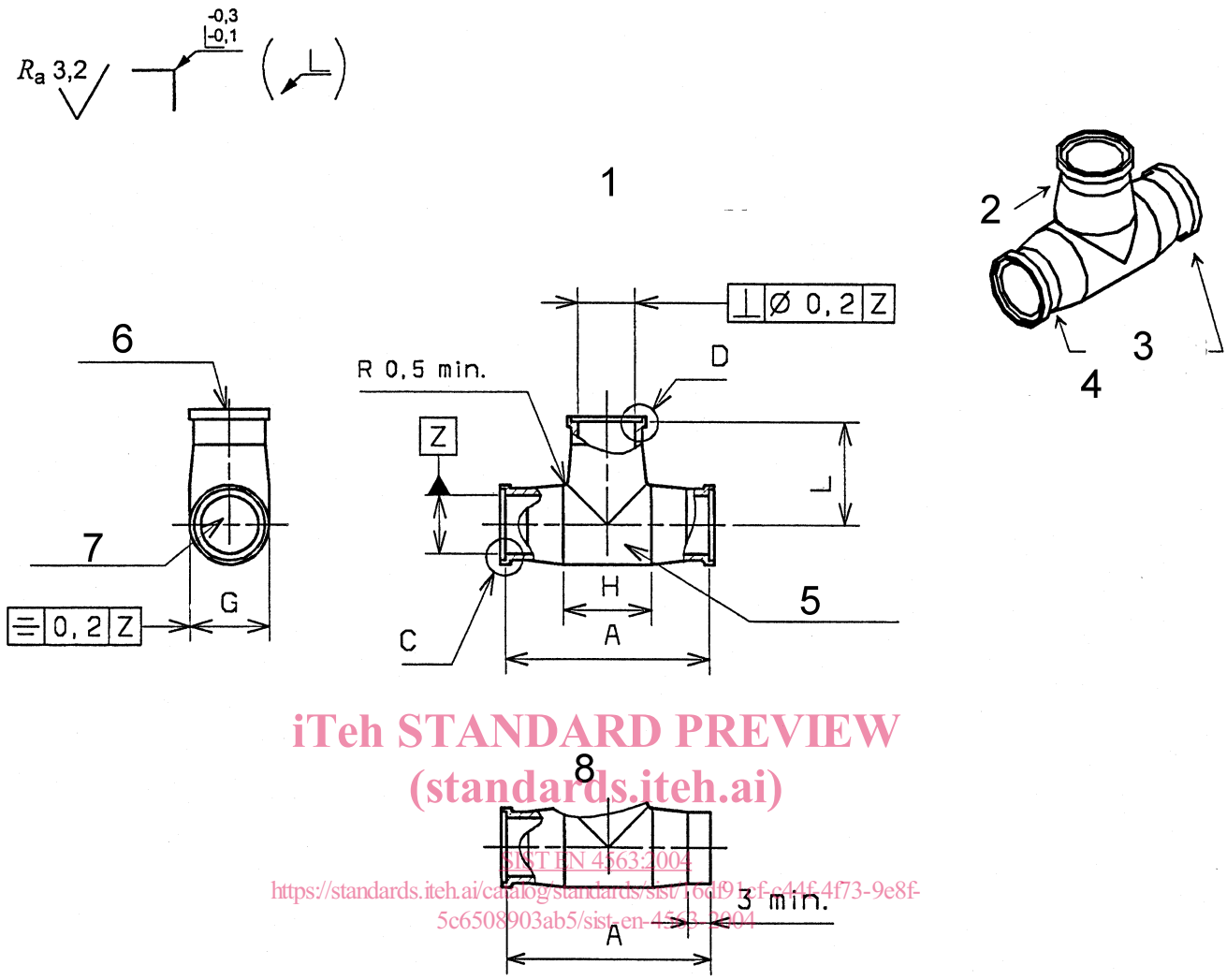

Key

1 Welding end option code 2
2 Leg side
3 Run sides
4 3 D view
5 Marking
6 Tube Y
7 Tube X
8 Welding end option code 1

Figure 1 – Shape for moulding or forging parts

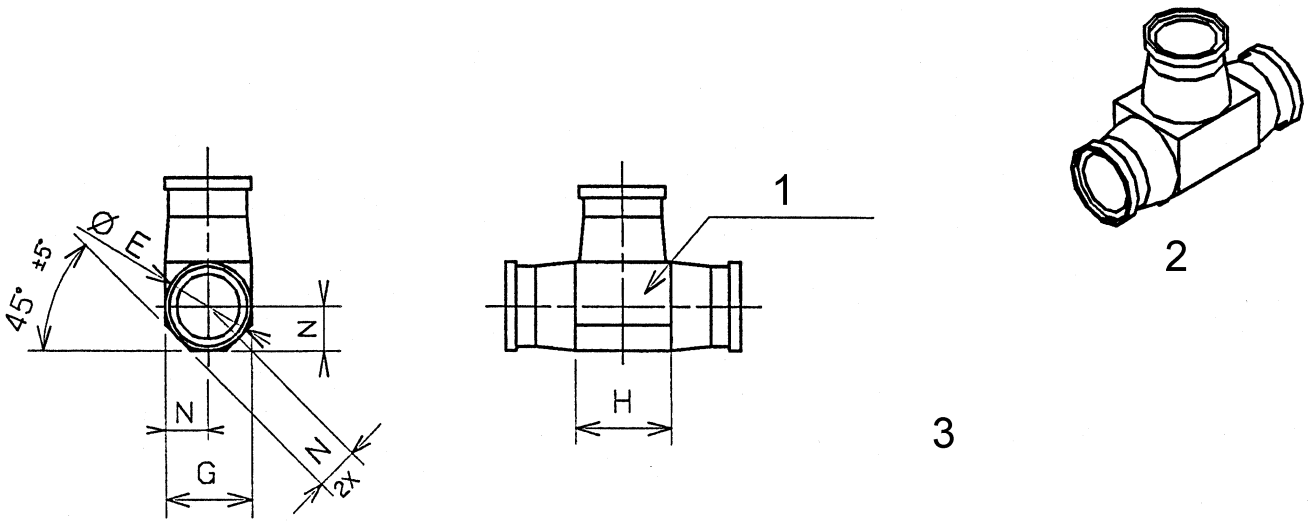

Key
1 Marking
2 3 D view
3 N théo = G/2

NOTE 1 Dimensions and tolerances given in Figure 1 are applicable to whole machining parts.
NOTE 2 Weld end option code 1 couplings may be whole machining with the dimensions and tolerances given in Figures 1 and 2.

Figure 2 – Shape for whole machining parts (alternate method of manufacture)

Table 2

Dimensional code [a]	Nominal diameter Tube X sides	Nominal diameter Tube Y side	Wall thickness of tube	C [b]	D
A0403	6,350	4,763	0,711	EN4549A004	EN4549A003
B0403			0,889	EN4549B004	EN4549B003
A0404		6,350	0,711	EN4549A004	EN4549A004
B0404			0,889	EN4549B004	EN4549B004
A0406		9,525	0,711	EN4549A004	EN4549A006
B0406			0,889	EN4549B004	EN4549B006
A0505	7,925	7,925	0,711	EN4549A005	EN4549A005
B0505			0,889	EN4549B005	EN4549B005
A0603	9,525	4,763	0,711	EN4549A006	EN4549A003
B0603			0,889	EN4549B006	EN4549B003
A0604		6,350	0,711	EN4549A006	EN4549A004
B0604			0,889	EN4549B006	EN4549B004
A0606		9,525	0,711	EN4549A006	EN4549A006
B0606			0,889	EN4549B006	EN4549B006
A0608		12,700	0,711	EN4549A006	EN4549A008
B0608			0,889	EN4549B006	EN4549B008
A0803	12,700	4,763	0,711	EN4549A008	EN4549A003
B0803			0,889	EN4549B008	EN4549B003
A0804		6,350	0,711	EN4549A008	EN4549A004
B0804			0,889	EN4549B008	EN4549B004
A0806		9,525	0,711	EN4549A008	EN4549A006
B0806			0,889	EN4549B008	EN4549B006
A0808		12,700	0,711	EN4549A008	EN4549A008
B0808			0,889	EN4549B008	EN4549B008
A0810		15,875	0,711	EN4549A008	EN4549A010
B0810			0,889	EN4549B008	EN4549B010
A1003	15,875	4,763	0,711	EN4549A010	EN4549A003
B1003			0,889	EN4549B010	EN4549B003
A1004		6,350	0,711	EN4549A010	EN4549A004
B1004			0,889	EN4549B010	EN4549B004
A1006		9,525	0,711	EN4549A010	EN4549A006
B1006			0,889	EN4549B010	EN4549B006
A1008		12,700	0,711	EN4549A010	EN4549A008
B1008			0,889	EN4549B010	EN4549B008
A1010		15,875	0,711	EN4549A010	EN4549A010
B1010			0,889	EN4549B010	EN4549B010
A1012		19,050	0,711	EN4549A010	EN4549A012
B1012			0,889	EN4549B010	EN4549B012
A1203	19,050	4,763	0,711	EN4549A012	EN4549A003
B1203			0,889	EN4549B012	EN4549B003
A1204		6,350	0,711	EN4549A012	EN4549A004
B1204			0,889	EN4549B012	EN4549B004
A1206		9,525	0,711	EN4549A012	EN4549A006
B1206			0,889	EN4549B012	EN4549B006
A1208		12,700	0,711	EN4549A012	EN4549A008
B1208			0,889	EN4549B012	EN4549B008
A1210		15,875	0,711	EN4549A012	EN4549A010
B1210			0,889	EN4549B012	EN4549B010
A1212		19,050	0,711	EN4549A012	EN4549A012
B1212			0,889	EN4549B012	EN4549B012

[a] This code corresponds to :
- tube wall thickness (A : 0,711 mm; B : 0,889 mm);
- nominal diameter of the run sides given in 16th of inches within two digits;
- nominal diameter of the leg side given in 16th of inches within two digits.

[b] When weld end option code is 1, the other side is as shown on the bottom of Figure 1.