IEC 62228-2

Edition 1.0 2016-11

INTERNATIONAL STANDARD

NORME INTERNATIONALE

colour inside

Integrated circuits – EMC evaluation of transceivers – Part 2: LIN transceivers

Circuits intégrés – Évaluation de la CEM des émetteurs-récepteurs – Partie 2: Émetteurs-récepteurs LIN

IEC 62228-2:2016-11(en-fr)

IEC Central Office
3, rue de Varembé
CH-1211 Geneva 20
Switzerland

Tel.: +41 22 919 02 11
Fax: +41 22 919 03 00
info@iec.ch
www.iec.ch

About the IEC
The International Electrotechnical Commission (IEC) is the leading global organization that prepares and publishes International Standards for all electrical, electronic and related technologies.

About IEC publications
The technical content of IEC publications is kept under constant review by the IEC. Please make sure that you have the latest edition, a corrigenda or an amendment might have been published.

IEC Catalogue - webstore.iec.ch/catalogue
The stand-alone application for consulting the entire bibliographical information on IEC International Standards, Technical Specifications, Technical Reports and other documents. Available for PC, Mac OS, Android Tablets and iPad.

IEC publications search - www.iec.ch/searchpub
The advanced search enables to find IEC publications by a variety of criteria (reference number, text, technical committee,…). It also gives information on projects, replaced and withdrawn publications.

IEC Just Published - webstore.iec.ch/justpublished
Stay up to date on all new IEC publications. Just Published details all new publications released. Available online and also once a month by email.

Electropedia - www.electropedia.org
The world's leading online dictionary of electronic and electrical terms containing 20 000 terms and definitions in English and French, with equivalent terms in 15 additional languages. Also known as the International Electrotechnical Vocabulary (IEV) online.

IEC Glossary - std.iec.ch/glossary
65 000 electrotechnical terminology entries in English and French extracted from the Terms and Definitions clause of IEC publications issued since 2002. Some entries have been collected from earlier publications of IEC TC 37, 77, 86 and CISPR.

IEC Customer Service Centre - webstore.iec.ch/csc
If you wish to give us your feedback on this publication or need further assistance, please contact the Customer Service Centre: csc@iec.ch.

A propos de l'IEC
La Commission Electrotechnique Internationale (IEC) est la première organisation mondiale qui élabore et publie des Normes internationales pour tout ce qui a trait à l'électricité, à l'électronique et aux technologies apparentées.

A propos des publications IEC
Le contenu technique des publications IEC est constamment revu. Veuillez vous assurer que vous possédez l'édition la plus récente, un corrigendum ou amendement peut avoir été publié.

Catalogue IEC - webstore.iec.ch/catalogue
Application autonome pour consulter tous les renseignements bibliographiques sur les Normes internationales, Spécifications techniques, Rapports techniques et autres documents de l'IEC. Disponible pour PC, Mac OS, tablettes Android et iPad.

Recherche de publications IEC - www.iec.ch/searchpub
La recherche avancée permet de trouver des publications IEC en utilisant différents critères (numéro de référence, texte, comité d'études,…). Elle donne aussi des informations sur les projets et les publications remplacées ou retirées.

IEC Just Published - webstore.iec.ch/justpublished
Restez informé sur les nouvelles publications IEC. Just Published détaille les nouvelles publications parues. Disponible en ligne et aussi une fois par mois par email.

Electropedia - www.electropedia.org
Le premier dictionnaire en ligne de termes électroniques et électriques. Il contient 20 000 termes et définitions en anglais et en français, ainsi que les termes équivalents dans 15 langues additionnelles. Egalement appelé Vocabulaire Electrotechnique International (IEV) en ligne.

Glossaire IEC - std.iec.ch/glossary
65 000 entrées terminologiques électrotechniques, en anglais et en français, extraites des articles Termes et Définitions des publications IEC parues depuis 2002. Plus certaines entrées antérieures extraites des publications des CE 37, 77, 86 et CISPR de l'IEC.

Service Clients - webstore.iec.ch/csc
Si vous désirez nous donner des commentaires sur cette publication ou si vous avez des questions contactez-nous: csc@iec.ch.

IEC 62228-2

Edition 1.0 2016-11

INTERNATIONAL STANDARD

NORME INTERNATIONALE

colour inside

Integrated circuits – EMC evaluation of transceivers – Part 2: LIN transceivers

Circuits intégrés – Évaluation de la CEM des émetteurs-récepteurs – Partie 2: Émetteurs-récepteurs LIN

INTERNATIONAL
ELECTROTECHNICAL
COMMISSION

COMMISSION
ELECTROTECHNIQUE
INTERNATIONALE

ICS 31.200

ISBN 978-2-8322-3776-2

Warning! Make sure that you obtained this publication from an authorized distributor.
Attention! Veuillez vous assurer que vous avez obtenu cette publication via un distributeur agréé.

CONTENTS

INTERNATIONAL ELECTROTECHNICAL COMMISSION

INTEGRATED CIRCUITS – EMC EVALUATION OF TRANSCEIVERS –

Part 2: LIN transceivers

FOREWORD

1) The International Electrotechnical Commission (IEC) is a worldwide organization for standardization comprising all national electrotechnical committees (IEC National Committees). The object of IEC is to promote international co-operation on all questions concerning standardization in the electrical and electronic fields. To this end and in addition to other activities, IEC publishes International Standards, Technical Specifications, Technical Reports, Publicly Available Specifications (PAS) and Guides (hereafter referred to as "IEC Publication(s)"). Their preparation is entrusted to technical committees; any IEC National Committee interested in the subject dealt with may participate in this preparatory work. International, governmental and non-governmental organizations liaising with the IEC also participate in this preparation. IEC collaborates closely with the International Organization for Standardization (ISO) in accordance with conditions determined by agreement between the two organizations.

2) The formal decisions or agreements of IEC on technical matters express, as nearly as possible, an international consensus of opinion on the relevant subjects since each technical committee has representation from all interested IEC National Committees.

3) IEC Publications have the form of recommendations for international use and are accepted by IEC National Committees in that sense. While all reasonable efforts are made to ensure that the technical content of IEC Publications is accurate, IEC cannot be held responsible for the way in which they are used or for any misinterpretation by any end user.

4) In order to promote international uniformity, IEC National Committees undertake to apply IEC Publications transparently to the maximum extent possible in their national and regional publications. Any divergence between any IEC Publication and the corresponding national or regional publication shall be clearly indicated in the latter.

5) IEC itself does not provide any attestation of conformity. Independent certification bodies provide conformity assessment services and, in some areas, access to IEC marks of conformity. IEC is not responsible for any services carried out by independent certification bodies.

6) All users should ensure that they have the latest edition of this publication.

7) No liability shall attach to IEC or its directors, employees, servants or agents including individual experts and members of its technical committees and IEC National Committees for any personal injury, property damage or other damage of any nature whatsoever, whether direct or indirect, or for costs (including legal fees) and expenses arising out of the publication, use of, or reliance upon, this IEC Publication or any other IEC Publications.

8) Attention is drawn to the Normative references cited in this publication. Use of the referenced publications is indispensable for the correct application of this publication.

9) Attention is drawn to the possibility that some of the elements of this IEC Publication may be the subject of patent rights. IEC shall not be held responsible for identifying any or all such patent rights.

International Standard IEC 62228-2 has been prepared by subcommittee 47A: Integrated circuits, of IEC technical committee 47: Semiconductor devices.

The text of this standard is based on the following documents:

FDIS	Report on voting
47A/994/FDIS	47A/998/RVD

Full information on the voting for the approval of this standard can be found in the report on voting indicated in the above table.

This publication has been drafted in accordance with the ISO/IEC Directives, Part 2.

A list of all parts in the IEC 62228 series, published under the general title *Integrated circuits – EMC evaluation of transceivers*, can be found on the IEC website.

The committee has decided that the contents of this publication will remain unchanged until the stability date indicated on the IEC website under "http://webstore.iec.ch" in the data related to the specific publication. At this date, the publication will be

- reconfirmed,
- withdrawn,
- replaced by a revised edition, or
- amended.

IMPORTANT – The 'colour inside' logo on the cover page of this publication indicates that it contains colours which are considered to be useful for the correct understanding of its contents. Users should therefore print this document using a colour printer.

INTEGRATED CIRCUITS – EMC EVALUATION OF TRANSCEIVERS –

Part 2: LIN transceivers

1 Scope

This part of IEC 62228 specifies test and measurement methods for EMC evaluation of LIN transceiver ICs under network condition. It defines test configurations, test conditions, test signals, failure criteria, test procedures, test setups and test boards. It is applicable for standard LIN transceiver ICs and ICs with embedded LIN transceiver and covers

- the emission of RF disturbances,
- the immunity against RF disturbances,
- the immunity against impulses and
- the immunity against electrostatic discharges (ESD).

2 Normative references

The following documents are referred to in the text in such a way that some or all of their content constitutes requirements of this document. For dated references, only the edition cited applies. For undated references, the latest edition of the referenced document (including any amendments) applies.

IEC 61967-1, *Integrated circuits – Measurement of electromagnetic emissions 150 kHz to 1 GHz – Part 1: General conditions and definitions*

IEC 61967-4, *Integrated circuits – Measurement of electromagnetic emissions 150 kHz to 1 GHz – Part 4: Measurement of conducted emissions – 1 Ω/150 Ω direct coupling method*

IEC 62132-1, *Integrated circuits – Measurement of electromagnetic immunity – Part 1: General conditions and definitions*

IEC 62132-4, *Integrated circuits – Measurement of electromagnetic immunity 150 kHz to 1 GHz – Part 4: Direct RF power injection method*

IEC 62215-3, *Integrated circuits – Measurement of impulse immunity – Part 3: Non-synchronous transient injection method*

ISO 7637-2, *Road vehicles — Electrical disturbances from conduction and coupling – Part 2: Electrical transient conduction along supply lines only*

ISO 10605, *Road vehicles – Test methods for electrical disturbances from electrostatic discharge*

ISO 17987-6.2 [1], *Road vehicles – Local interconnect network (LIN) – Part 6: Protocol conformance test specification*

---

[1] To be published.

3 Terms, definitions and abbreviations

3.1 Terms and definitions

For the purposes of this document, the terms and definitions given in IEC 61967-1, IEC 62132-1, as well as the following apply.

3.1.1
global pin
pin that carries a signal or power, which enters or leaves the application board without any active component in between

3.1.2
standard LIN transceiver IC
stand alone LIN transceiver according to ISO 17987 or IC with integrated LIN transceiver cell with access to LIN RxD and TxD signal

3.1.3
IC with embedded LIN transceiver
IC with integrated LIN transceiver cell and LIN protocol handler but without access to LIN RxD or TxD signal

3.2 Abbreviations

DUT	Device under test
DPI	Direct RF power injection
INH	Inhibit
LIN	Local interconnect network
PCB	Printed circuit board
RxD	Receive data
SBC	System base chip
TxD	Transmit data

4 General

The intention of this document is to evaluate the EMC performance of LIN transceiver ICs under application conditions in a minimal network. LIN transceiver ICs are in general available in two types as standard LIN transceiver IC and as IC with embedded LIN transceiver.

The evaluation of the EMC characteristics of LIN transceivers shall be performed in functional operation modes under network condition for RF emission, RF immunity and impulse immunity tests and on a single unpowered transceiver IC for electrostatic discharge tests.

The aim of these tests is to determine the EMC performance on dedicated global pins of the LIN transceiver which are considered as EMC relevant in the application. For a standard LIN transceiver IC, these pins are LIN, VBAT and local WAKE and for an IC with an embedded LIN transceiver, these pins are at least LIN and VBAT.

The test methods used for the EMC characterization are based on the international standards for IC EMC tests and are described in Table 1.

Table 1 – Overview of required measurements and tests

Transceiver mode	Required test	Test method	Evaluation	Functional operation mode
Functional (powered)	RF emission (EMI)	150 Ω direct coupling (IEC 61967-4)	Spectrum	Normal
	RF immunity (RF)	DPI (IEC 62132-4)	Function	Normal
				Sleep
	Impulse immunity (IMP)	Impulse immunity (IEC 62215-3)	Function	Normal
				Sleep
Passive (unpowered)	ESD	Contact discharge (ISO 10605)	Damage	Off

The 150 Ω direct coupling, DPI and impulse immunity test methods are chosen for the evaluation of the EMC characteristic of transceivers in functional modes. These three test methods are based on the same approach using conductive coupling. Therefore it is possible to use the same test board for all tests in functional operation mode, which reduces the effort and increases the reproducibility and comparability of test results.

The ESD test is performed on passive transceiver IC on a separate test board.

All measurements and tests should be done with soldered transceivers on special test boards as described in Annex B to ensure application like conditions and avoid setup effects by sockets.

In general, the test definition is done for standard LIN transceiver ICs. For ICs with embedded LIN transceivers some adaptations are necessary which are mainly described in this document. Finally such adaptations have to be done individually for the dedicated IC but shall follow the general definitions.

In order to verify filter effects on the EMC performance of LIN transceivers, configurations with and without a bus filter at the LIN pin, with values based on ISO 17987, are defined in this document. In consequence the frequency characteristic of these filter elements have to be taken into account for the interpretation of the test results.

5 Test and operating conditions

5.1 Supply and ambient conditions

For all tests and measurements under operating conditions the settings are based on systems with 12 V power supply, which is the main application of LIN transceivers. If a transceiver is designed or targeted for higher power supply voltages the test conditions and test targets shall be adapted and documented accordingly. The defined supply and ambient conditions for functional operation are given in Table 2.

Table 2 – Supply and ambient conditions for functional operation

Parameter	Value
Voltage supply V_{BAT}	(14 ± 0,2) V (default)
Voltage supply V_{CC}	(5 ± 0,1) V (default)
Test temperature	(23 ± 5) °C

For RF Emission measurements the ambient noise floor shall be at least 6 dB below the applied target limit and documented in the test report.

Unpowered ESD tests shall be carried out without any supply voltage and the requirements of ISO 10605 climatic environmental conditions shall be applied.

5.2 Test operation modes

The LIN transceiver ICs shall be tested in powered functional operation modes and passive in unpowered off mode. Functional operation modes are normal mode and sleep mode.

5.3 Test configuration

5.3.1 General test configuration for functional test

The test configuration in general consists of LIN transceivers with mandatory external components and components for filtering and decoupling (LIN node) in a minimal test network, where filtered power supplies, signals, monitoring probes and coupling networks are connected as shown in Figure 1.

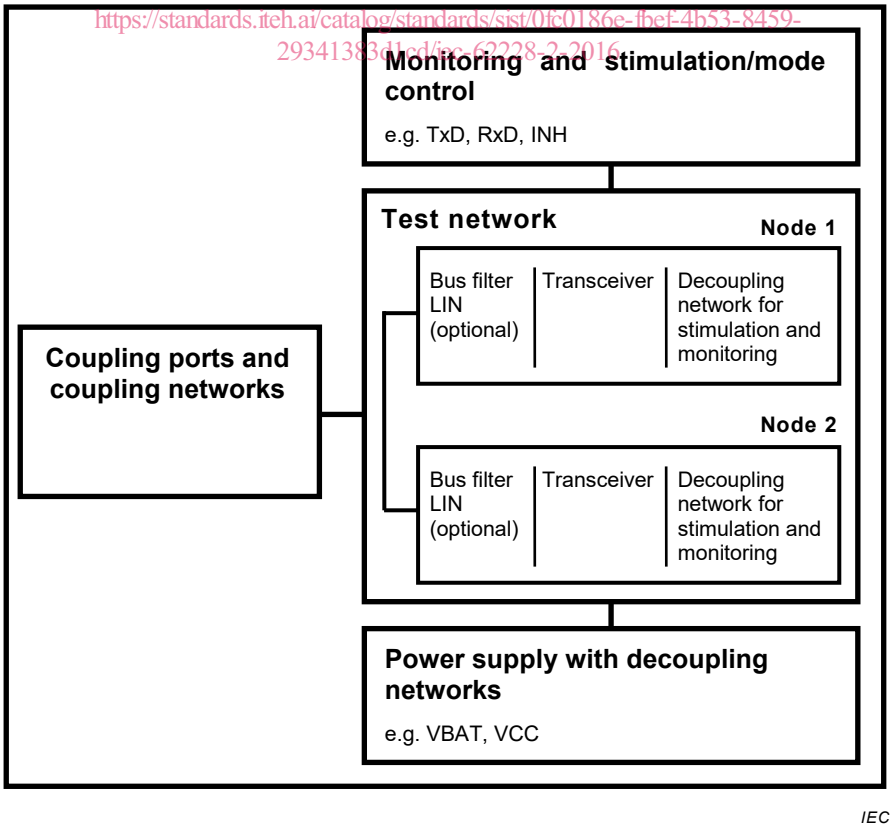

Figure 1 – General test configuration for tests in functional operation modes

For evaluation of RF emission, RF immunity and impulse immunity characteristic of a LIN transceiver in functional operation mode a minimal LIN test network consisting of two LIN transceiver ICs shall be used. Depending on the type of transceiver the following network configurations are defined:

- two transceivers of same type in case of standard LIN transceiver IC (DUT), or
- one IC with embedded LIN transceiver (DUT) and one standard LIN transceiver IC.

NOTE In specific cases or for analyses a deviation from this setup can be agreed between the users of this document and will be noted in the test report.

General drawings of schematics with more details for both types of LIN transceivers test networks are given in Annex A.

5.3.2 General test configuration for unpowered ESD test

The general test configuration for unpowered ESD test of LIN transceiver ICs consists of a single LIN transceiver IC with mandatory external components and components for filtering on a test board with discharge coupling networks as shown in Figure 2.

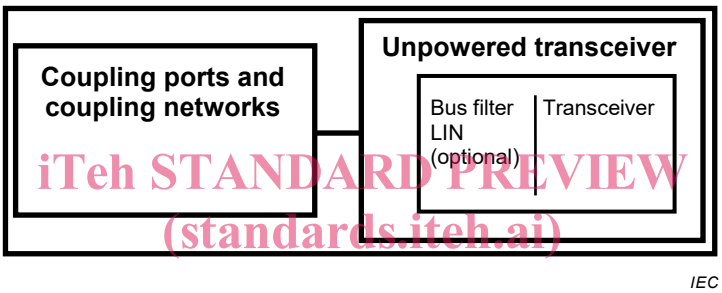

Figure 2 – General test configuration for unpowered ESD test

5.3.3 Coupling ports and coupling networks for functional tests

The coupling ports and coupling networks are used to transfer disturbances to or from the test network with a defined transfer characteristic. The schematic of the coupling ports, networks and pins are shown in Figure 3. The values of the components are dependent on the test method and defined in Table 3. The tolerance of the components shall be 1 % or less.

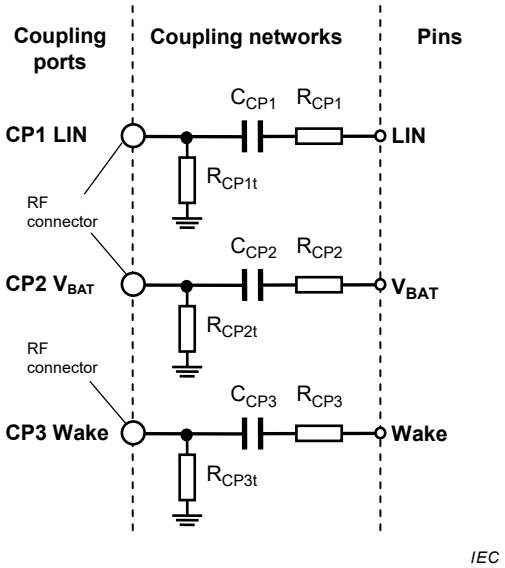

Figure 3 – Coupling ports and networks for functional tests

Table 3 – Definition of coupling ports and coupling network component values for functional tests

Port	Type	Purpose	Component		
			$R_{CP1..3}$	$C_{CP1..3}$	$R_{CP1..3t}$
CP1	EMI1	RF emission measurement on LIN	120 Ω	4,7 nF	51 Ω
	RF1	RF coupling for immunity test on LIN	0 Ω	4,7 nF	not used
	IMP1	Impulse coupling on LIN	0 Ω	1,0 nF	not used
CP2	EMI2	RF emission measurement on V_{BAT}	120 Ω	6,8 nF	51 Ω
	RF2	RF coupling for immunity test on V_{BAT}	0 Ω	6,8 nF	not used
	IMP2	Impulse coupling on V_{BAT}	0 Ω	Shorted	not used
CP3	EMI3	RF emission measurement on Wake	120 Ω	6,8 nF	51 Ω
	RF3	RF coupling for immunity test on Wake	0 Ω	6,8 nF	not used
	IMP3	Impulse coupling on Wake	0 Ω	1,0 nF	not used

The test configurations with coupling ports and coupling networks connected to the LIN test network are given in the general drawing of schematics in Figure A.1 for standard LIN transceiver ICs and in Figure A.2 for ICs with embedded LIN transceiver.

The characterization of the coupling ports and coupling networks is carried out as follows:

The magnitude of insertion losses (S21 measurement) between the ports CP1 to CP3 and the respective transceiver signal pads on the test board shall be measured and documented in the test report. For this characterization the coupling port shall be configured for RF immunity test and the LIN transceiver ICs shall be removed. All other components which are directly connected to the coupling port (e.g. filter to power supply or loads) remain on the test board.

5.3.4 Coupling ports and coupling networks for unpowered ESD tests

The coupling ports and coupling networks used for unpowered direct ESD tests connect the discharge points to the LIN transceiver IC test circuitry. The schematic and definitions of the coupling ports, networks and pins are given in Figure 4 and Table 4.

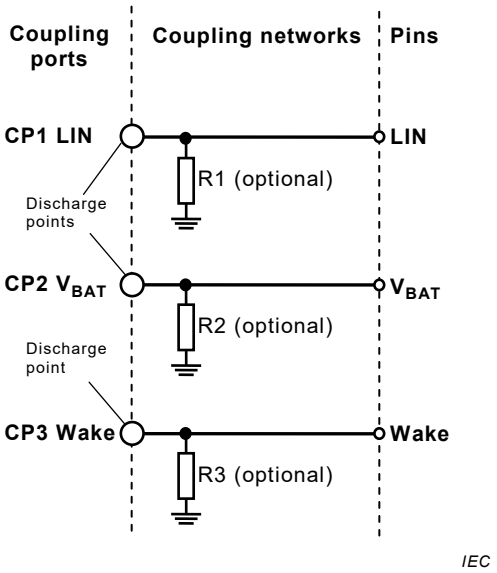

Figure 4 – Coupling ports and networks for unpowered ESD tests

Table 4 – Definitions of coupling ports for unpowered ESD tests

Port	Type	Purpose	Components
CP1	ESD1	ESD coupling on LIN	metal trace for galvanic connection [a]
CP2	ESD2	ESD coupling on V_{BAT}	metal trace for galvanic connection [a]
CP3	ESD3	ESD coupling on Wake	metal trace for galvanic connection [a]

[a] The optional resistors R1 to R3 with $R \geq 200$ kΩ are used to avoid static pre-charge of discharge point caused by the ESD generator. A spark over at these resistors at high test levels shall be avoided. If a static pre-charge is prevented by the ESD generator construction these resistors are not needed. Alternatively an external resistor can be used to remove pre-charges of each discharge point before each single test.

5.4 Test signals

5.4.1 General

Depending on the transceiver type, different test signals are defined for communication in normal operation mode and wake-up from sleep mode of the LIN transceiver ICs.

5.4.2 Test signals for normal operation mode

The communication test signal TX1 shall be used for testing standard LIN transceiver ICs in normal operation mode. For ICs with embedded LIN transceiver TX1 is used to analyze if the DUT effects other LIN communication which is not addressed to it. The parameters of this periodical signal are defined in Table 5.

Table 5 – Communication test signal TX1

Test signal	TX1
Signal type	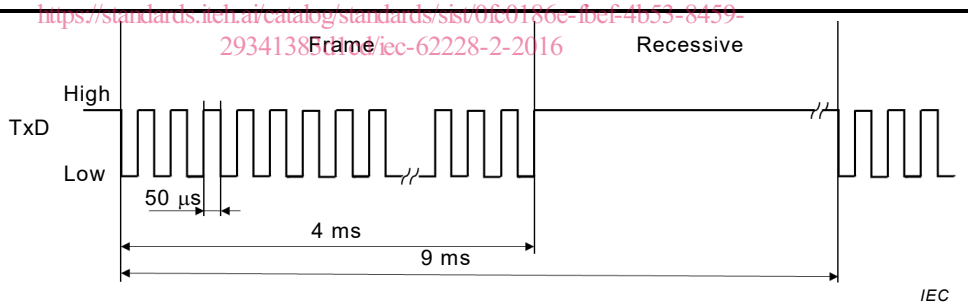
Frequency	10 kHz
Cycle time	9 ms
Frame length	4 ms
Amplitude	VCC ± 0,1 V

The communication test signal TX2 shall be used for tests of ICs with embedded LIN transceiver in normal mode. The signal is defined as a LIN frame with the parameters given in Table 6 where the embedded LIN transceiver has to transmit and/or respond depending on its designed or programmed functionality.