SLOVENSKI STANDARD
SIST EN 14606:2005

01-marec-2005

Plovila za celinske vode – Gladka veriga za sidro – Oprema

Inland navigation vessels - Studless anchor chain - Accessories

Fahrzeuge der Binnenschifffahrt - Steglose Ankerkette - Zubehör

Bateaux de navigation intérieure - Chaîne d'ancre sans pignon - Accessoires

iTeh STANDARD PREVIEW
(standards.iteh.ai)

Ta slovenski standard je istoveten z: EN 14606:2004

SIST EN 14606:2005
https://standards.iteh.ai/catalog/standards/sist/fde8e976-e0f2-47f6-a4dc-a08b9cad9ae5/sist-en-14606-2005

ICS:

47.020.50	Palubna oprema ter naprave	Deck equipment and installations
47.060	Jezerska in reḷ na plovila	Inland navigation vessels

SIST EN 14606:2005 en

2003-01.Slovenski inštitut za standardizacijo. Razmnoževanje celote ali delov tega standarda ni dovoljeno.

SIST EN 14606:2005

iTeh STANDARD PREVIEW
(standards.iteh.ai)

SIST EN 14606:2005
https://standards.iteh.ai/catalog/standards/sist/fde8e976-e0f2-47f6-a4dc-a08b9cad9ae5/sist-en-14606-2005

SIST EN 14606:2005

EUROPEAN STANDARD

NORME EUROPÉENNE

EUROPÄISCHE NORM

EN 14606

September 2004

ICS 47.020.50; 47.060

English version

Inland navigation vessels - Studless anchor chain - Accessories

Bateaux de navigation intérieure - Chaîne d'ancre sans pignon - Accessoires

Fahrzeuge der Binnenschifffahrt - Steglose Ankerkette - Zubehör

This European Standard was approved by CEN on 29 July 2004.

CEN members are bound to comply with the CEN/CENELEC Internal Regulations which stipulate the conditions for giving this European Standard the status of a national standard without any alteration. Up-to-date lists and bibliographical references concerning such national standards may be obtained on application to the Central Secretariat or to any CEN member.

This European Standard exists in three official versions (English, French, German). A version in any other language made by translation under the responsibility of a CEN member into its own language and notified to the Central Secretariat has the same status as the official versions.

CEN members are the national standards bodies of Austria, Belgium, Cyprus, Czech Republic, Denmark, Estonia, Finland, France, Germany, Greece, Hungary, Iceland, Ireland, Italy, Latvia, Lithuania, Luxembourg, Malta, Netherlands, Norway, Poland, Portugal, Slovakia, Slovenia, Spain, Sweden, Switzerland and United Kingdom.

iTeh STANDARD PREVIEW
(standards.iteh.ai)
SIST EN 14606:2005
https://standards.iteh.ai/catalog/standards/sist/fde8e976-e0f2-47f6-a4dc-a08b9cad9ae5/sist-en-14606-2005

EUROPEAN COMMITTEE FOR STANDARDIZATION
COMITÉ EUROPÉEN DE NORMALISATION
EUROPÄISCHES KOMITEE FÜR NORMUNG

Management Centre: rue de Stassart, 36 B-1050 Brussels

© 2004 CEN All rights of exploitation in any form and by any means reserved worldwide for CEN national Members.

Ref. No. EN 14606:2004: E

SIST EN 14606:2005

Contents

Page

Foreword 3
1 Scope 4
2 Normative references 4
3 Terms and definitions 4
4 Requirements 5
4.1 Components 5
4.1.1 Joining link 5
4.1.2 Common link 7
4.1.3 Enlarged link 8
4.1.4 End link 9
4.1.5 Chain swivel 10
4.1.6 End shackle 12
4.1.7 Swivel shackle 14
4.1.8 Kenter-type joining shackle 16
4.2 Assemblies 17
4.2.1 Anchor swivel 17
4.2.2 Swivel shackle 17
4.2.3 Swivel outboard shot 17
5 Construction 17
5.1 Materials 17
5.2 Strength and mechanical properties 18
6 Testing 18
6.1 Strength test 18
6.2 Dimensions 18
7 Designation 19
8 Marking 19
Annex A (informative) Examples of connections of the studless anchor chain to the anchor 20
A.1 Anchor swivel with joining link 20
A.2 Swivel shackle with joining link 21
A.3 Swivel outboard shot with joining link and end shackle 22
A.4 Swivel outboard shot with Kenter-type joining shackle and end shackle 23
Bibliography 24

iTeh STANDARD PREVIEW
(standards.iteh.ai)
SIST EN 14606:2005
https://standards.iteh.ai/catalog/standards/sist/fde8e976-e0f2-47f6-a4dc-a08b9cad9ae3/sist-en-14606-2005

SIST EN 14606:2005

Foreword

This document EN 14606:2004 has been prepared by Technical Committee CEN/TC 15 “Inland navigation vessels”, the secretariat of which is held by DIN.

This European Standard shall be given the status of a national standard, either by publication of an identical text or by endorsement, at the latest by March 2005, and conflicting national standards shall be withdrawn at the latest by March 2005

This document contains a bibliography.

.According to the CEN/CENELEC Internal Regulations, the national standards organizations of the following countries are bound to implement this European Standard: Austria, Belgium, Cyprus, Czech Republic, Denmark, Estonia, Finland, France, Germany, Greece, Hungary, Iceland, Ireland, Italy, Latvia, Lithuania, Luxembourg, Malta, Netherlands, Norway, Poland, Portugal, Slovakia, Slovenia, Spain, Sweden, Switzerland and the United Kingdom.

iTeh STANDARD PREVIEW
(standards.iteh.ai)

SIST EN 14606:2005
https://standards.iteh.ai/catalog/standards/sist/fde8e976-e0f2-47f6-a4dc-a08b9cad9ae5/sist-en-14606-2005

SIST EN 14606:2005

1 Scope

This document applies to accessories used with round steel chains as specified in EN 14330 as studless anchor chains for inland navigation vessels.

It specifies the construction, dimensions and testing of accessories such as joining links and end links, chain swivels, end shackles, swivel shackles and Kenter-type joining shackles.

It does not apply to anchor equipment consisting of cable stoppers, cable lockers or end fastenings, for example.

2 Normative references

The following referenced documents are indispensable for the application of this document. For dated references, only the edition cited applies. For undated references, the latest edition of the referenced document (including any amendments) applies.

EN 10243-1, *Steel die forgings — Tolerances on dimensions — Part 1: Drop and vertical press forgings.*

EN 14330, *Inland navigation vessels — Studless anchor chain — Round steel chain.*

EN 22339, *Taper pins, unhardened (ISO 2339:1986).*

iTeh STANDARD PREVIEW
(standards.iteh.ai)

EN ISO 7046-2, *Cross-recessed countersunk flat head screws (common head style) — Product grade A — Part 2: Steel of property class 8.8, stainless steel and non-ferrous metal (ISO 7046-2:1990).*

ISO 1704, *Shipbuilding — Stud-link anchor chains.*

SIST EN 14606:2005
https://standards.iteh.ai/catalog/standards/sist/fb8e076e-a0D-476e-a4b-a08b9cad9ae5/sist-en-14606-2005

ISO 2768-1, *General tolerances — Part 1: Tolerances for linear and angular dimensions without individual tolerance indications.*

3 Terms and definitions

For the purposes of this document, the following terms and definitions apply.

3.1
joining link
single link for joining the round steel chain to anchor swivel (3.10) or swivel shackle (3.7) or swivel outboard shot (3.9)

3.2
common link
single link for joining the swivel outboard shot (3.9) to connecting link (3.1) or Kenter-type joining shackle (3.8)

3.3.
enlarged link
single link for joining a chain swivel (3.5) to common link (3.2) or end link (3.4)

3.4
end link
single link for joining an enlarged link (3.3) to end shackle (3.6)

SIST EN 14606:2005

3.5
chain swivel
rotatable connection in the swivel outboard shot (3.9) of a studless anchor chain

3.6
end shackle
bracket with oval bolt in the swivel outboard shot (3.9) of a studless anchor chain

3.7
swivel shackle
rotatable connection between round steel chain and anchor

3.8
Kenter-type joining shackle
connecting element for making a detachable connection between round steel chain and swivel outboard shot (3.9)

NOTE Kenter was the inventor of this shackle.

3.9
swivel outboard shot
component of the studless anchor chain joining the round steel chain and anchor to the twist compensator

3.10
anchor swivel
rotatable non-detachable element on the anchor shaft

iTeh STANDARD PREVIEW
(standards.iteh.ai)

3.11
anchor shackle
rotatable, but non-detachable, element on the anchor shaft for connecting to the round steel chain through swivel outboard shot (3.9)

SIST EN 14606:2005
https://standards.iteh.ai/catalog/standards/sist/fde8e976-e0f2-47f6-a4dc-a08b9cad9ae5/sist-en-14606-2005

4 Requirements

4.1 Components

4.1.1 Joining link

For dimensions of joining links (3.1), see Figure 1 and Table 1.

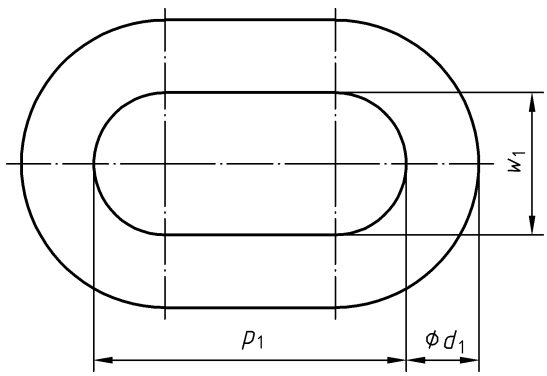

Figure 1 — Joining link

SIST EN 14606:2005

Table 1 — Nominal dimensions and masses of joining links

Nominal size [a] $d \times p$ mm	Diameter d_1 mm	Pitch p_1 mm	Internal width w_1 Mm	Mass [b] G kg
10 × 28 13 × 36	13 16	55 70	25 30	0,19 0,36
16 × 45 18 × 50	20 23	90 100	40 45	0,7 1,1
20 × 56 23 × 64	26 28	115 125	50 55	1,5 1,9
26 × 73 28 × 78	32 36	140 160	65 70	2,9 4,1
30 × 84 33 × 92	38 40	165 175	75 80	4,8 5,6
36 × 101 39 × 109 42 × 118	45 48 50	200 210 220	90 95 100	8 9,7 11

[a] Nominal size $d \times p$ according to EN 14330.

[b] Nominal dimensions in millimetres (mm) and masses, in kilograms (kg), are calculated as follows:

$p_1 = 4{,}4 \times d_1$; $G = 87{,}7 \times d_1^3 \times 10^{-6}$; $w_1 = 6{,}8 \times WF^{0{,}5}$; $WF = 0{,}141 \times d^2$ according to EN 14330.

iTeh STANDARD PREVIEW
(standards.iteh.ai)
SIST EN 14606:2005
https://standards.iteh.ai/catalog/standards/sist/fb8e976-e0f2-47f6-a4dc-a08b9cad9ae5/sist-en-14606-2005

SIST EN 14606:2005

4.1.2 Common link

For dimensions of the common link (3.2) as shown in Figure 1 and Table 1 of ISO 1704:1991, see Figure 2 and Table 2.

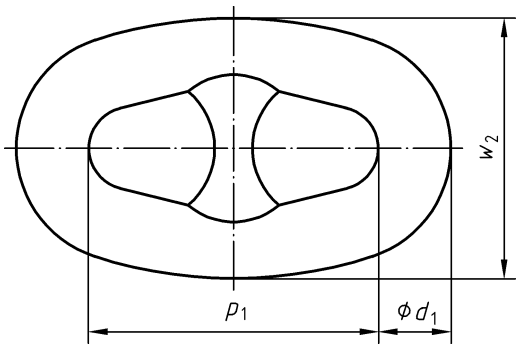

Figure 2 — Common link

Table 2 — Nominal dimensions and masses of common links

Nominal size [a]	Diameter	Pitch	External width	Mass [b]	Nominal diameter to ISO 1704 [c]
$d \times p$	d_1	p_1	w_2	G	D
mm	mm	mm	mm	kg	Mm
13 × 36	12,5	50	45	0,17	12,5
16 × 45	16	64	58	0,36	16
18 × 50	17,5	70	63	0,47	17,5
20 × 56	20,5	82	74	0,75	20,5
23 × 64	22	88	79	0,93	22
26 × 73	26	104	94	1,5	26
28 × 78	28	112	101	1,9	28
30 × 84	30	120	108	2,4	30
33 × 92	32	128	115	2,9	32
36 × 101	36	144	130	4,1	36
39 × 109	38	152	137	4,8	38
42 × 118	42	168	151	6,5	42

[a] Nominal size $d \times p$ according to EN 14330.

[b] Nominal dimensions in millimetres (mm) and masses, in kilograms (kg), are calculated as follows:
$p_1 = 4 \times d_1$; $w_2 = 3{,}6 \times d_1$; $G = 87{,}6 \times 10^{-6} \times d_1^3$

[c] Nominal diameter assigned to the nominal size according to ISO 1704:1991, Table 1.

iTeh STANDARD PREVIEW
(standards.iteh.ai)
SIST EN 14606:2005
https://standards.iteh.ai/catalog/standards/sist/fde8e916-e0f2-47f6-a4dc-a08b9cad9ae5/sist-en-14606-2005

SIST EN 14606:2005

4.1.3 Enlarged link

For dimensions of the enlarged link (3.3), according to Figure 2 and Table 2 of ISO 1704:1991, see Figure 3 and Table 3.

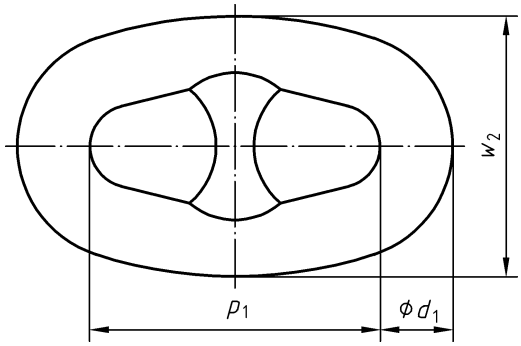

Figure 3 — Enlarged link

Table 3 — Nominal dimensions and masses of enlarged links

Nominal size [a] $d \times p$ mm	Diameter d_1 Mm	Pitch p_1 mm	External width w_2 mm	Mass [b] G kg	Nominal diameter to ISO 1704 [c] D Mm
13 × 36	14	56	50	0,24	12,5
16 × 45	17,5	70	63	0,47	16
18 × 50	19	76	68	0,60	17,5
20 × 56	22	88	79	0,93	20,5
23 × 64	24	96	86	1,2	22
26 × 73	28	112	101	1,9	26
28 × 78	30	120	108	2,4	28
30 × 84	34	136	122	3,4	30
33 × 92	36	144	130	4,1	32
36 × 101	40	160	144	5,6	36
39 × 109	42	168	151	6,5	38
42 × 118	46	184	166	8,5	42

[a] Nominal size $d \times p$ according to EN 14330.

[b] Nominal dimensions in millimetres (mm) and masses, in kilograms (kg), are calculated as follows: $d_1 = 1{,}1 \times D$; $p_1 = 4 \times d_1$; $w_2 = 3{,}6 \times d_1$; $G = 87{,}6 \times 10^{-6} \times d_1^3$.

[c] Nominal diameter assigned to the nominal size according to ISO 1704:1991, Table 1.

iTeh STANDARD PREVIEW
(standards.iteh.ai)
SIST EN 14606:2005
https://standards.iteh.ai/catalog/standards/sist/fde8e976-c0f2-47f6-a4dc-a76b9cad9ae5/sist-en-14606-2005

SIST EN 14606:2005

4.1.4 End link

For dimensions of the end link (3.4), according to Figure 3 and Table 3 of ISO 1704:1991, see Figure 4 and Table 4.

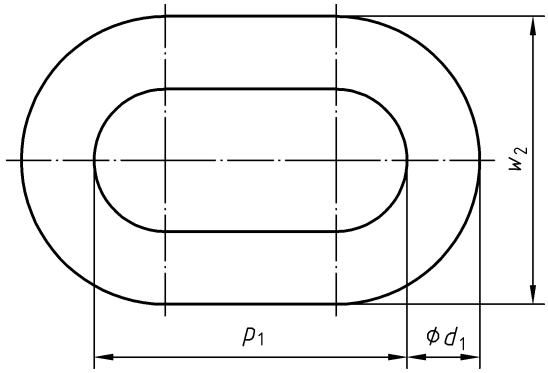

Figure 4 — End link

Table 4 — Nominal dimensions and masses of end links

Nominal size [a] $d \times p$ mm	Diameter d_1 mm	Pitch p_1 mm	External width w_2 mm	Mass [b] G kg	Nominal diameter to ISO 1704 [c] D Mm
13 × 36	16	54	50	0,17	12,5
16 × 45	19	70	64	0,36	16
18 × 50	20,5	76	70	0,47	17,5
20 × 56	24	89	82	0,76	20,5
23 × 64	26	96	88	0,94	22
26 × 73	32	113	104	1,5	26
28 × 78	34	122	112	1,9	28
30 × 84	36	131	120	2,4	30
33 × 92	38	139	128	2,9	32
36 × 101	44	157	144	4,1	36
39 × 109	46	165	152	4,8	38
42 × 118	50	183	168	6,5	42

[a] Nominal size d × p according to EN 14330.

[b] Nominal dimensions in millimetres (mm) and masses in kilograms (kg) are calculated as follows: $d_1 = 1{,}2 \times D$; $p_1 = 4{,}35 \times D$; $w_2 = 4 \times D$; $G = 81{,}4 \times 10^{-6} \times D^3$.

[c] Nominal diameter assigned to the nominal size according to ISO 1704:1991, Table 1.

iTeh STANDARD PREVIEW
(standards.iteh.ai)
SIST EN 14606:2005
https://standards.iteh.ai/catalog/standards/sist/fde8c976-c0f2-47f6-a4dc-a08b9cad9ae5/sist-en-14606-2005