SLOVENSKI STANDARD
SIST EN 2596:2009

01-maj-2009

Nadomešča:
SIST EN 2596:2001
SIST EN 2596:2001/AC1:2001

Aeronavtika - Zaščitne podložke, radialno ozobljene, iz korozijsko odpornega jekla, s kadmijevo prevleko, za kontrolne palice pri krmiljenju - Mere

Aerospace series - Washers, lock, with radial serrations in corrosion resisting steel, cadmium plated for flight control rods - Dimensions

iTeh STANDARD PREVIEW
(standards.iteh.ai)

Luft- und Raumfahrt - Sicherungen, radialverzahnt aus korrosionsbeständigem Stahl, verkadmet für Bediengestänge von Flugsteuerungen - Maße

SIST EN 2596:2009
https://standards.iteh.ai/catalog/standards/sist/6d98f6c6-34bd-4a7a-9c3e-e9febd02fc01/sist-en-2596-2009

Série aérospatiale - Freins à stries radiales en acier résistant à la corrosion, cadmiés pour bielles de commandes de vol - Dimensions

Ta slovenski standard je istoveten z: EN 2596:2006

ICS:

49.030.50	Podložke in drugi blokirni elementi	Washers and other locking elements

SIST EN 2596:2009 **en,de**

2003-01.Slovenski inštitut za standardizacijo. Razmnoževanje celote ali delov tega standarda ni dovoljeno.

SIST EN 2596:2009

iTeh STANDARD PREVIEW
(standards.iteh.ai)

SIST EN 2596:2009
https://standards.iteh.ai/catalog/standards/sist/6d98f6c6-34bd-4a7a-9c3e-e9febd02fc01/sist-en-2596-2009

SIST EN 2596:2009

EUROPEAN STANDARD

NORME EUROPÉENNE

EUROPÄISCHE NORM

EN 2596

May 2006

ICS 49.060

Supersedes EN 2596:1988

English Version

Aerospace series - Washers, lock, with radial serrations in corrosion resisting steel, cadmium plated for flight control rods - Dimensions

Série aérospatiale - Freins à stries radiales en acier résistant à la corrosion, cadmiés pour bielles de commandes de vol - Dimensions

Luft- und Raumfahrt - Sicherungen, radialverzahnt aus korrosionsbeständigem Stahl, verkadmet für Bediengestänge von Flugsteuerungen - Maße

This European Standard was approved by CEN on 6 January 2006.

CEN members are bound to comply with the CEN/CENELEC Internal Regulations which stipulate the conditions for giving this European Standard the status of a national standard without any alteration. Up-to-date lists and bibliographical references concerning such national standards may be obtained on application to the Central Secretariat or to any CEN member.

This European Standard exists in three official versions (English, French, German). A version in any other language made by translation under the responsibility of a CEN member into its own language and notified to the Central Secretariat has the same status as the official versions.

iTeh STANDARD PREVIEW
(standards.iteh.ai)

CEN members are the national standards bodies of Austria, Belgium, Cyprus, Czech Republic, Denmark, Estonia, Finland, France, Germany, Greece, Hungary, Iceland, Ireland, Italy, Latvia, Lithuania, Luxembourg, Malta, Netherlands, Norway, Poland, Portugal, Romania, Slovakia, Slovenia, Spain, Sweden, Switzerland and United Kingdom.

SIST EN 2596:2009
https://standards.iteh.ai/catalog/standards/sist/6d98f6c6-34bd-4a7a-9c3e-e9febd02fc01/sist-en-2596-2009

EUROPEAN COMMITTEE FOR STANDARDIZATION
COMITÉ EUROPÉEN DE NORMALISATION
EUROPÄISCHES KOMITEE FÜR NORMUNG

Management Centre: rue de Stassart, 36 B-1050 Brussels

© 2006 CEN All rights of exploitation in any form and by any means reserved worldwide for CEN national Members.

Ref. No. EN 2596:2006: E

SIST EN 2596:2009

Contents

Page

Foreword 3
1 Scope 4
2 Normative references 4
3 Required characteristics 4
4 Designation 6
5 Marking 7
6 Qualification 7

iTeh STANDARD PREVIEW
(standards.iteh.ai)

SIST EN 2596:2009
https://standards.iteh.ai/catalog/standards/sist/6d98f6c6-34bd-4a7a-9c3e-e9febd02fc01/sist-en-2596-2009

SIST EN 2596:2009

Foreword

This European Standard (EN 2596:2006) has been prepared by the European Association of Aerospace Manufacturers - Standardization (AECMA-STAN).

After enquiries and votes carried out in accordance with the rules of this Association, this Standard has received the approval of the National Associations and the Official Services of the member countries of AECMA, prior to its presentation to CEN.

This European Standard shall be given the status of a national standard, either by publication of an identical text or by endorsement, at the latest by November 2006, and conflicting national standards shall be withdrawn at the latest by November 2006.

Attention is drawn to the possibility that some of the elements of this document may be the subject of patent rights. CEN [and/or CENELEC] shall not be held responsible for identifying any or all such patent rights.

This European Standard supersedes EN 2596:1988.

According to the CEN/CENELEC Internal Regulations, the national standards organizations of the following countries are bound to implement this European Standard: Austria, Belgium, Cyprus, Czech Republic, Denmark, Estonia, Finland, France, Germany, Greece, Hungary, Iceland, Ireland, Italy, Latvia, Lithuania, Luxembourg, Malta, Netherlands, Norway, Poland, Portugal, Romania, Slovakia, Slovenia, Spain, Sweden, Switzerland and the United Kingdom.

iTeh STANDARD PREVIEW
(standards.iteh.ai)
SIST EN 2596:2009
https://standards.iteh.ai/catalog/standards/sist/6d98f6c6-34bd-4a7a-9c3e-e9febd02fc01/sist-en-2596-2009

SIST EN 2596:2009

1 Scope

This standard specifies the characteristics of lock washers in corrosion resisting steel, cadmium plated, with radial serrations primarily intended for flight control rods.

These lock washers are intended to immobilise the rod end in relation to the rod body, whilst allowing a precise positional adjustment.

2 Normative references

The following referenced documents are indispensable for the application of this document. For dated references, only the edition cited applies. For undated references, the latest edition of the referenced document (including any amendments) applies.

EN 2133, *Aerospace series — Cadmium plating of steels with specified tensile strength ≤ 1 450 MPa, copper, copper alloys and nickel alloys.*

EN 2538, *Aerospace series — Steel FE-PM3801 (X5CrNiCu17-4) — Air melted — Solution treated and precipitation treated — Sheet and strip — a ≤ 6 mm — R_m ≥ 1 310 MPa.* [1)]

EN 2540, *Aerospace series — Steel FE-PM3902 (X7CrNiAl17-7) — Air Melted — Solution treated and precipitation hardened — Sheet and strip — a ≤ 6 mm — 1 240 MPa ≤ R_m ≤ 1 450 MPa.* [1)]

EN 9100, *Aerospace series — Quality management systems — Requirements (based on ISO 9001:2000) and Quality systems — Model for quality assurance in design, development, production, installation and servicing (based on ISO 9001:1994).*

iTeh STANDARD PREVIEW
(standards.iteh.ai)

3 Required characteristics

SIST EN 2596:2009
https://standards.iteh.ai/catalog/standards/sist/6d98f6c6-34bd-4a7a-9c3e-e9febd02fc01/sist-en-2596-2009

3.1 Dimensions – Mass

Configuration shall correspond with Figures 1, 2 and 3.

The dimensions and masses shall conform with values quoted in Tables 1 and 2.

Dimensions apply after cadmium plating.

3.2 Surface roughness

R_a = 3,2 µm. This value applies prior to cadmium plating.

3.3 Material

Steel according to EN 2540 or EN 2538 (inactive for new design).

3.4 Surface treatment

Cadmium plated according to EN 2133, 10 µm to 20 µm, without chromatation.

---

1) Published as AECMA Prestandard at the date of publication of this standard.

SIST EN 2596:2009

Dimensions in millimetres

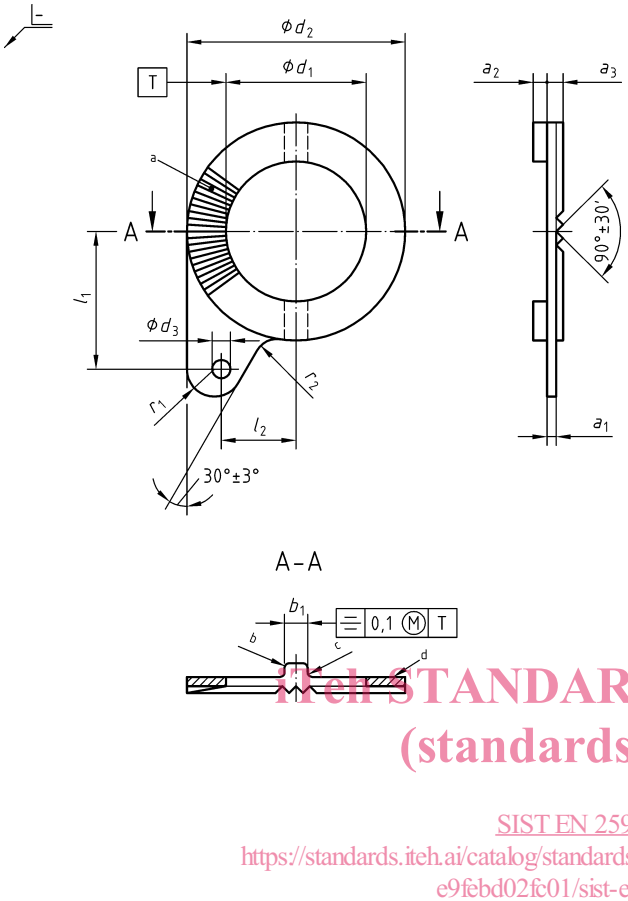

Dimensions in millimetres

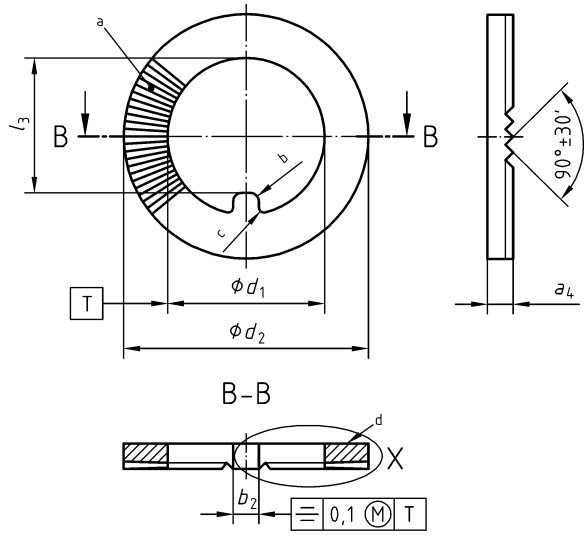

iTeh STANDARD PREVIEW
(standards.iteh.ai)
SIST EN 2596:2009
https://standards.iteh.ai/catalog/standards/sist/6d98f6c6-34bd-4a7a-9c3e-e9febd02fc01/sist-en-2596-2009

a N equidistant serrations
b *R* 0,5 to 0,8
c *R* 0,3 to 0,5
d Identification mark

Figure 1 — Element for rod body side – Code A

a N equidistant serrations
b *R* 0,5 to 0,8
c *R* 0,3 to 0,4
d Identification mark

Figure 2 — Element for rod end side – Code B

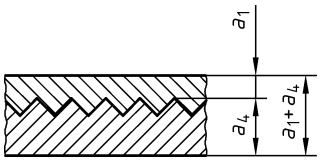

Figure 3 — Thickness of lock washer assembly

SIST EN 2596:2009

Table 1

Dimensions in millimetres

Diameter code	d_1 ± 0,1	d_2 $^{+0,5}_{0}$	d_3 ± 0,25	a_1 ± 0,15	a_2 $^{+0,15}_{-0,25}$	a_3 ± 0,15	a_4 ± 0,15	(a_5)	b_1 ± 0,15	b_2 ± 0,15	l_1 ± 0,25	l_2 ± 0,25	l_3 $^{0}_{-0,15}$	r_1 ± 0,15	r_2 ± 0,15
08	8,2	12,7	1,6	0,58	1,0	1,1	1,8	0,5	1,3	1,3	8,4	4,0	6,8	2,4	0,70
10	10,2	19,0		0,80		1,4	2,0	0,6	2,0	2,0	12,0	6,5	8,3		2,00
12	12,2				1,2								10,5		
14	14,2	22,0	1,8		1,5		2,3		2,9	2,9	13,0	8,8	12,5		
16	16,3	25,4		0,86		1,6		0,7	3,0	3,0	14,7	10,0	14,0	2,7	1,45

Table 2

Diameter code	N Number of serrations	α min.	α max.	$a_1 + a_4$ mm ± 0,3	Mass lock washer assembly g ≈
08	42	87°21'	88°21'	2,38	1,8
10	50	87°42'	88°42'	2,80	6,0
12					4,5
14	56	89°20'	90°	3,10	5,8
16				3,16	9,6

iTeh STANDARD PREVIEW
(standards.iteh.ai)
SIST EN 2596:2009
https://standards.iteh.ai/catalog/standards/sist/6b98fbc6-34bd-4a7a-9c3e-e9febd02fc01/sist-en-2596-2009

4 Designation

EXAMPLE

Description block	Identity block
WASHER LOCK	EN2596A08

Number of this standard

Code for the lock washer (see Table 3)

Diameter code (see Table 1)

NOTE If necessary, the code I9005 shall be placed between the description block and the identity block.