INTERNATIONAL STANDARD

ISO 10097-2

First edition
1999-10-15

Wireline diamond core drilling equipment — System A —

Part 2:
Inch units

Équipement de forage au diamant à ligne à câble avec carottage — Système A —

Partie 2: Unités en inches

Reference number
ISO 10097-2:1999(E)

Contents

International Organization for Standardization
Case postale 56 • CH-1211 Genève 20 • Switzerland
Internet iso@iso.ch

Printed in Switzerland

Foreword

ISO (the International Organization for Standardization) is a worldwide federation of national standards bodies (ISO member bodies). The work of preparing International Standards is normally carried out through ISO technical committees. Each member body interested in a subject for which a technical committee has been established has the right to be represented on that committee. International organizations, governmental and non-governmental, in liaison with ISO, also take part in the work. ISO collaborates closely with the International Electrotechnical Commission (IEC) on all matters of electrotechnical standardization.

International Standards are drafted in accordance with the rules given in the ISO/IEC Directives, Part 3.

Draft International Standards adopted by the technical committees are circulated to the member bodies for voting. Publication as an International Standard requires approval by at least 75 % of the member bodies casting a vote.

International Standard ISO 10097-2 was prepared by Technical Committee ISO/TC 82, *Mining*, Subcommittee SC 6, *Diamond core drilling equipment*.

ISO 10097 consists of the following parts, under the general title *Wireline diamond core drilling equipment — System A*:

— *Part 1: Metric units*

— *Part 2: Inch units*

Annex A of this part of ISO 10097 is for information only.

Introduction

ISO 10097 is intended for independent use as well as for use in combination with ISO 3551-2, which covers equipment designed for conventional diamond drilling.

This International Standard covers equipment intended for application with diamond bits, but is should be understood that bits may have other cutting materials.

Wireline diamond core drilling equipment — System A —

Part 2:
Inch units

1 Scope

This part of ISO 10097 specifies the nomenclature and the leading dimensions necessary for the interchangeability of the following wireline drilling equipment for drilling holes of diameter 1,890 in to 3,790 in, yielding cores of diameter 1,063 in to 2,500 in.

The equipment is illustrated in Figure 1 and comprises the following:

a) core bit;

b) reaming shell;

c) core lifter;

d) core lifter case;

e) outer tube;

f) inner tube;

g) drill rod (smooth pipe only).

2 Normative reference

The following normative document contains provisions which, through reference in this text, constitute provisions of this part of ISO 10097. For dated references, subsequent amendments to, or revisions of, this publication do not apply. However, parties to agreements based on this part of ISO 10097 are encouraged to investigate the possibility of applying the most recent edition of the normative document indicated below. For undated references, the latest edition of the normative document referred to applies. Members of ISO and IEC maintain registers of currently valid International Standards.

ISO 3551-2:1992, *Rotary core diamond drilling equipment — System A — Part 2: Inch units.*

3 Designation

Items made in accordance with this part of ISO 10097 shall be designated by the identification letters WL and hole dimensions A, B, N, H.

EXAMPLE

Core bit for wireline drilling hole B dimensions: WLB core bit.

4 Materials

Materials used in the manufacture of the wireline drilling equipment specified in this part of ISO 10097 shall have the minimum mechanical properties as specified in Table 1.

Table 1 — Mechanical properties

Component	Minimum tensile strength, R_m lbf/in^2	Minimum yield stress, R_e lbf/in^2	Minimum elongation A_2 %
Drill rods	100 000	80 000	15
Core tubes	100 000	80 000	15
Other items	Not specified		

5 Dimensions and tolerances

5.1 General

All dimensions and tolerances are in inches unless otherwise stated and shall be in accordance with Tables 3 to 9 inclusive.

5.2 Conformity

In those industries where drilling depths are measured in metres, the rod lengths shall be 3,0 m, 1,5 m or 0,75 m. When drilling in conformity with DCDMA and CDDA standards, the lengths of rods may be 10 ft, 5 ft or 2,5 ft.

5.3 Eccentricity

The eccentricity is defined as the distance between the centres of the outer and inner diameters and may not exceed 10 % of the nominal wall thickness Q.

The eccentricity is calculated according to the formula:

$$\frac{Q_{max} - Q_{min}}{2Q_{nom}} \times 100$$

where Q_{max} and Q_{min} are measured values in the section.

5.4 Straightness

When measured over the whole length of the tube by rolling against a straightedge, the maximum deviation shall not be greater than:

— for drill rods 1 in 2 000;

— for core tubes 1 in 1 500.

5.5 Technical conditions

Tubes should be made seamless. Tube rolling technique and machining operations are optional.

Tube straightness is checked by rolling the tube on a horizontal or slightly inclined flat surface. When rolling, no clearances shall be seen between the rod ends and the surface, nor between the middle of the rod (tube) and the surface.

Hole drilling by wireline system A equipment shall be cased by system A casing as specified in ISO 3551-2.

Table 2 — System of dimensional identification letters

A, A_1, etc.	Outside diameters; A being largest; A_1, A_2, etc. progressively smaller
B, B_1, etc.	Inside diameters; B being smallest; B_1, B_2, etc. progressively larger
C, C_1, etc.	External lengths; C being longest; C_1, C_2, etc. progressively shorter
D, D_1, etc.	Internal lengths; D being longest; D_1, D_2, etc. progressively shorter
E, E_1, etc.	Major diameter of pin threads; E being largest; E_1, E_2, etc. smaller
F, F_1, etc.	Minor diameter of pin threads; F being largest; F_1, F_2, etc. smaller
Thread pitch (threads per inch)	Pin threads
G, G_1, etc.	Width at root of pin thread
H, H_1, etc.	Length of o.d. machined for external threading
J, J_1, etc.	Minimum length for full depth of pin threads
K, K_1, etc.	Length of relief at the starting point of pin threads
L, L_1, etc.	Angle of bevel for pin thread shoulder
M, M_1, etc.	Major diameter of box threads; M being largest; M_1, M_2, etc. smaller
N, N_1, etc.	Minor diameter of box; N being largest; N_1, N_2, etc. smaller
Thread pitch (threads per inch)	Box threads
P, P_1, etc.	Width at root of box threads
Q, Q_1, etc.	Length of i.d. machined for internal threading
R, R_1, etc.	Minimum length for full depth of box threads
S, S_1, etc.	Length of counter bore at the starting of box threads
T, T_1, etc.	Angle of bevel for thread shoulder
U, U_1, etc.	Included angles: Internal and external
V, V_1, etc.	Internal angles, not pertaining to threaded connections
W, W_1, etc.	External angles, not pertaining to threaded connections
X	Diamond set dimensions: External (o.d.)
Y	Diamond set dimensions: Internal (i.d.)

NOTE 1 All decimal dimensions indicate allowable tolerances.

NOTE 2 The following common abreviations have sometimes been used in tables in the English version for the sake of simplicity:
o.d = outside diameter
i.d. = inside diameter.

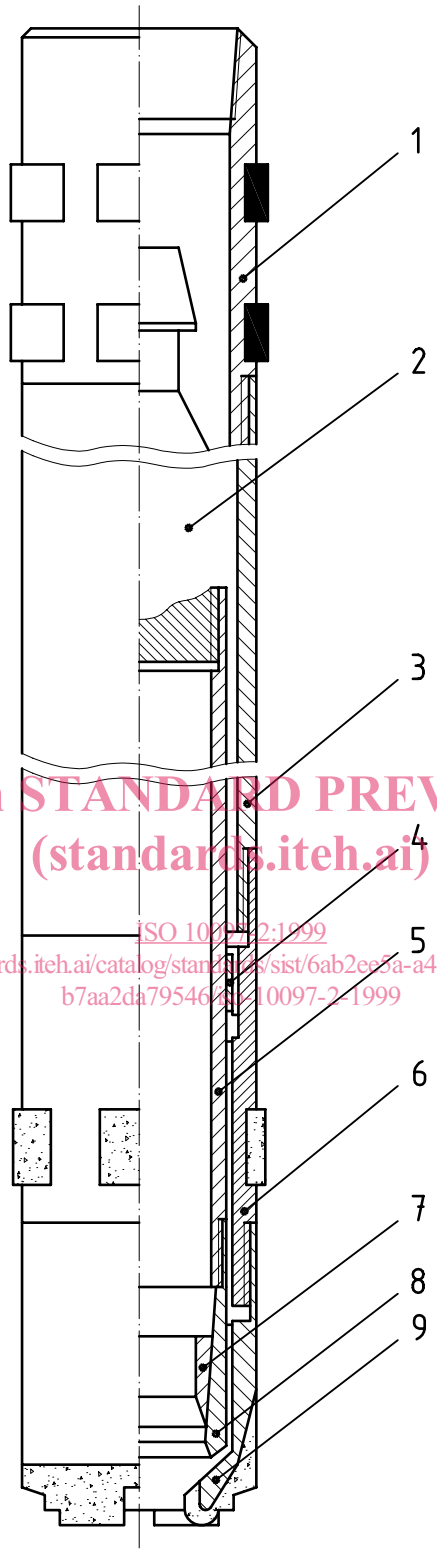

Key

1 Head (not standardized)
2 Bearing unit (not standardized)
3 Outer core barrel
4 Stabilizer (not standardized)
5 Retractable core barrel
6 Reaming shell
7 Core lifter
8 Core lifter case
9 Bit

Figure 1 — Wireline core barrel assembly

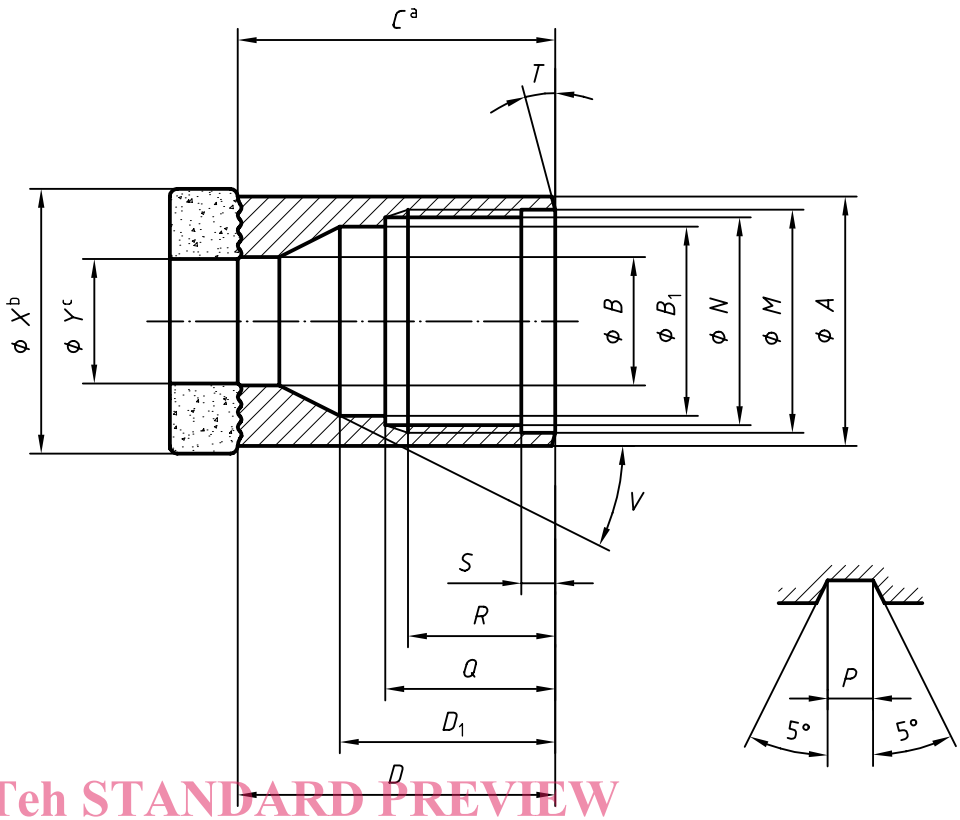

a Clear of diamonds
b Set o.d.
c Set i.d.

Figure 2 — Wireline core bit

Table 3 — Wireline core bit (see Figure 2)

Dimension		WLA	WLB	WLN	WLH
A	max.	1,837	2,282	2,910	3,713
	min.	1,833	2,278	2,906	3,709
B	max.	1,098	1,484	1,922	2,547
	min.	1,093	1,453	1,891	2,516
B_1	max.	1,453	1,828	2,391	3,078
	min.	1,422	1,797	2,359	3,047
C	min.	2,280	2,600	2,575	3,788
D	max.	2,311	2,631	2,606	3,819
	min.	2,280	2,600	2,575	3,788
D_1	max.	1,953	2,266	2,141	3,297
	min.	1,922	2,234	2,109	3,266
M	max.	1,657	2,064	2,658	3,377
	min.	1,655	2,062	2,656	3,374
N	max.	1,598	2,002	2,598	3,315
	min.	1,595	2,000	2,596	3,312
Threads per inch		4	4	4	4
P	max.	0,126	0,126	0,126	0,126
	min.	0,123	0,123	0,123	0,123
Q	max.	1,665	1,674	1,675	1,683
	min.	1,660	1,669	1,670	1,678
R	min.	1,531	1,531	1,531	1,531
S	max.	0,281	0,281	0,281	0,281
	min.	0,250	0,250	0,250	0,250
T		15°	15°	15°	15°
V		30°	30°	30°	30°
X	max.	1,880	2,350	2,970	3,770
	min.	1,870	2,340	2,960	3,755
Y	max.	1,067	1,438	1,880	2,505
	min.	1,057	1,428	1,870	2,495