IEC 61076-3-122

Edition 1.0 2017-05

INTERNATIONAL STANDARD

NORME INTERNATIONALE

colour inside

Connectors for electrical and electronic equipment – Product requirements – Part 3-122: Detail specification for 8-way, shielded, free and fixed connectors for I/O and Gigabit Ethernet applications in harsh environments

Connecteurs pour équipements électriques et électroniques – Exigences de produit – Partie 3-122: Spécification particulière pour les fiches et les embases écrantées à 8 voies pour applications E/S et Ethernet Gigabit en environnements sévères

IEC 61076-3-122:2017-05(en-fr)

IEC Central Office
3, rue de Varembé
CH-1211 Geneva 20
Switzerland

Tel.: +41 22 919 02 11
info@iec.ch
www.iec.ch

About the IEC
The International Electrotechnical Commission (IEC) is the leading global organization that prepares and publishes International Standards for all electrical, electronic and related technologies.

About IEC publications
The technical content of IEC publications is kept under constant review by the IEC. Please make sure that you have the latest edition, a corrigendum or an amendment might have been published.

IEC publications search - webstore.iec.ch/advsearchform
The advanced search enables to find IEC publications by a variety of criteria (reference number, text, technical committee,…). It also gives information on projects, replaced and withdrawn publications.

IEC Just Published - webstore.iec.ch/justpublished
Stay up to date on all new IEC publications. Just Published details all new publications released. Available online and once a month by email.

IEC Customer Service Centre - webstore.iec.ch/csc
If you wish to give us your feedback on this publication or need further assistance, please contact the Customer Service Centre: sales@iec.ch.

Electropedia - www.electropedia.org
The world's leading online dictionary on electrotechnology, containing more than 22 000 terminological entries in English and French, with equivalent terms in 16 additional languages. Also known as the International Electrotechnical Vocabulary (IEV) online.

IEC Glossary - std.iec.ch/glossary
67 000 electrotechnical terminology entries in English and French extracted from the Terms and Definitions clause of IEC publications issued since 2002. Some entries have been collected from earlier publications of IEC TC 37, 77, 86 and CISPR.

A propos de l'IEC
La Commission Electrotechnique Internationale (IEC) est la première organisation mondiale qui élabore et publie des Normes internationales pour tout ce qui a trait à l'électricité, à l'électronique et aux technologies apparentées.

A propos des publications IEC
Le contenu technique des publications IEC est constamment revu. Veuillez vous assurer que vous possédez l'édition la plus récente, un corrigendum ou amendement peut avoir été publié.

Recherche de publications IEC - webstore.iec.ch/advsearchform
La recherche avancée permet de trouver des publications IEC en utilisant différents critères (numéro de référence, texte, comité d'études,…). Elle donne aussi des informations sur les projets et les publications remplacées ou retirées.

IEC Just Published - webstore.iec.ch/justpublished
Restez informé sur les nouvelles publications IEC. Just Published détaille les nouvelles publications parues. Disponible en ligne et une fois par mois par email.

Service Clients - webstore.iec.ch/csc
Si vous désirez nous donner des commentaires sur cette publication ou si vous avez des questions contactez-nous: sales@iec.ch.

Electropedia - www.electropedia.org
Le premier dictionnaire d'électrotechnologie en ligne au monde, avec plus de 22 000 articles terminologiques en anglais et en français, ainsi que les termes équivalents dans 16 langues additionnelles. Egalement appelé Vocabulaire Electrotechnique International (IEV) en ligne.

Glossaire IEC - std.iec.ch/glossary
67 000 entrées terminologiques électrotechniques, en anglais et en français, extraites des articles Termes et Définitions des publications IEC parues depuis 2002. Plus certaines entrées antérieures extraites des publications des CE 37, 77, 86 et CISPR de l'IEC.

IEC 61076-3-122

Edition 1.0 2017-05

INTERNATIONAL STANDARD

NORME INTERNATIONALE

colour inside

Connectors for electrical and electronic equipment – Product requirements – Part 3-122: Detail specification for 8-way, shielded, free and fixed connectors for I/O and Gigabit Ethernet applications in harsh environments

Connecteurs pour équipements électriques et électroniques – Exigences de produit – Partie 3-122: Spécification particulière pour les fiches et les embases écrantées à 8 voies pour applications E/S et Ethernet Gigabit en environnements sévères

INTERNATIONAL
ELECTROTECHNICAL
COMMISSION

COMMISSION
ELECTROTECHNIQUE
INTERNATIONALE

ICS 31.220.10

ISBN 978-2-8322-8448-3

Warning! Make sure that you obtained this publication from an authorized distributor.
Attention! Veuillez vous assurer que vous avez obtenu cette publication via un distributeur agréé.

CONTENTS

INTERNATIONAL ELECTROTECHNICAL COMMISSION

CONNECTORS FOR ELECTRICAL AND ELECTRONIC EQUIPMENT – PRODUCT REQUIREMENTS –

Part 3-122: Detail specification for 8-way, shielded, free and fixed connectors for I/O and Gigabit Ethernet applications in harsh environments

FOREWORD

1) The International Electrotechnical Commission (IEC) is a worldwide organization for standardization comprising all national electrotechnical committees (IEC National Committees). The object of IEC is to promote international co-operation on all questions concerning standardization in the electrical and electronic fields. To this end and in addition to other activities, IEC publishes International Standards, Technical Specifications, Technical Reports, Publicly Available Specifications (PAS) and Guides (hereafter referred to as "IEC Publication(s)"). Their preparation is entrusted to technical committees; any IEC National Committee interested in the subject dealt with may participate in this preparatory work. International, governmental and non-governmental organizations liaising with the IEC also participate in this preparation. IEC collaborates closely with the International Organization for Standardization (ISO) in accordance with conditions determined by agreement between the two organizations.

2) The formal decisions or agreements of IEC on technical matters express, as nearly as possible, an international consensus of opinion on the relevant subjects since each technical committee has representation from all interested IEC National Committees.

3) IEC Publications have the form of recommendations for international use and are accepted by IEC National Committees in that sense. While all reasonable efforts are made to ensure that the technical content of IEC Publications is accurate, IEC cannot be held responsible for the way in which they are used or for any misinterpretation by any end user.

4) In order to promote international uniformity, IEC National Committees undertake to apply IEC Publications transparently to the maximum extent possible in their national and regional publications. Any divergence between any IEC Publication and the corresponding national or regional publication shall be clearly indicated in the latter.

5) IEC itself does not provide any attestation of conformity. Independent certification bodies provide conformity assessment services and, in some areas, access to IEC marks of conformity. IEC is not responsible for any services carried out by independent certification bodies.

6) All users should ensure that they have the latest edition of this publication.

7) No liability shall attach to IEC or its directors, employees, servants or agents including individual experts and members of its technical committees and IEC National Committees for any personal injury, property damage or other damage of any nature whatsoever, whether direct or indirect, or for costs (including legal fees) and expenses arising out of the publication, use of, or reliance upon, this IEC Publication or any other IEC Publications.

8) Attention is drawn to the Normative references cited in this publication. Use of the referenced publications is indispensable for the correct application of this publication.

9) Attention is drawn to the possibility that some of the elements of this IEC Publication may be the subject of patent rights. IEC shall not be held responsible for identifying any or all such patent rights.

International Standard IEC 61076-3-122 has been prepared by subcommittee 48B: Electrical connectors, of IEC technical committee 48: Electrical connectors and mechanical structures for electrical and electronic equipment.

The text of this International Standard is based on the following documents:

FDIS	Report on voting
48B/2554/FDIS	48B/2563/RVD

Full information on the voting for the approval of this International Standard can be found in the report on voting indicated in the above table.

This document has been drafted in accordance with the ISO/IEC Directives, Part 2.

A list of all parts in the IEC 61076 series, published under the general title *Connectors for electronic equipment – Product requirements*, can be found on the IEC website.

The committee has decided that the contents of this document will remain unchanged until the stability date indicated on the IEC website under "http://webstore.iec.ch" in the data related to the specific document. At this date, the document will be

- reconfirmed,
- withdrawn,
- replaced by a revised edition, or
- amended.

IMPORTANT – The 'colour inside' logo on the cover page of this publication indicates that it contains colours which are considered to be useful for the correct understanding of its contents. Users should therefore print this document using a colour printer.

	IEC 61076-3-122:2017
Subcommittee 48B: Electrical connectors	
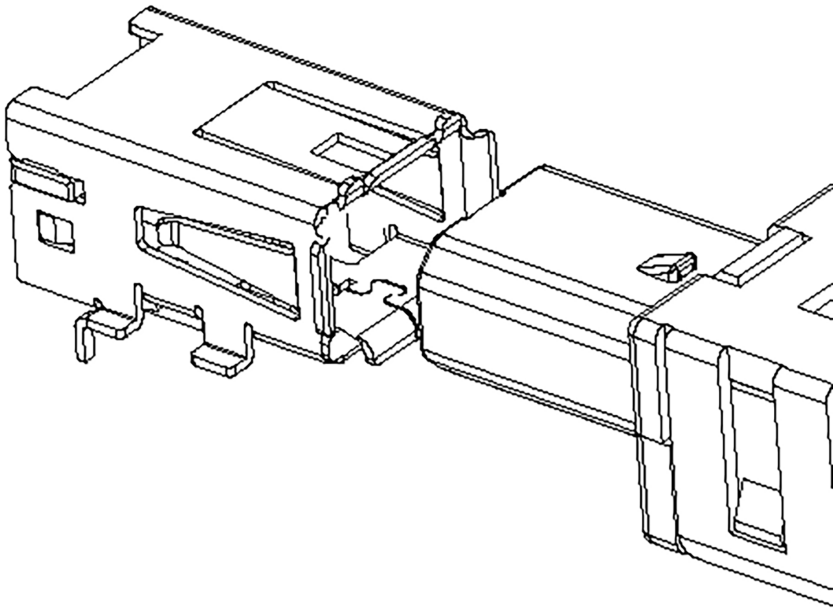 IEC	Detail specification for 8-way, shielded, free and fixed connectors for I/O and Gigabit Ethernet applications in harsh environments
NOTE The above view shows a Type I connector pair, with coding edges on a short side; for Type II connectors the coding edges are located on a long side.	Fixed connectors are mounted on printed circuit board by means of soldering or press-in, the free connector is attached to wires by means of soldering, crimping, IDC or other termination technology.

CONNECTORS FOR ELECTRICAL AND ELECTRONIC EQUIPMENT – PRODUCT REQUIREMENTS –

Part 3-122: Detail specification for 8-way, shielded, free and fixed connectors for I/O and Gigabit Ethernet applications in harsh environments

1 Scope

This part of IEC 61076 covers 8-way, shielded, free and fixed rectangular connectors for I/O and Gigabit Ethernet applications, suitable for use in harsh environments, and is intended to specify the common dimensions, mechanical, electrical and environmental characteristics and tests for this family of connectors.

2 Normative references

The following documents are referred to in the text in such a way that some or all of their content constitutes requirements of this document. For dated references, only the edition cited applies. For undated references, the latest edition of the referenced document (including any amendments) applies.

IEC 60050-581, *International Electrotechnical Vocabulary (IEV) – Chapter 581: Electromechanical components for electronic equipment*

IEC 60068-1, *Environmental testing – Part 1: General and guidance*

IEC 60068-2-38, *Environmental testing – Part 2-38: Tests – Test Z/AD: Composite temperature/humidity cyclic test*

IEC 60512-1, *Connectors for electronic equipment – Tests and measurements – Part 1: General*

IEC 60512-1-1, *Connectors for electronic equipment – Tests and measurements – Part 1-1: General examination – Test 1a: Visual examination*

IEC 60512-1-2, *Connectors for electronic equipment – Tests and measurements – Part 1-2: General examination – Test 1b: Examination of dimension and mass*

IEC 60512-2-1, *Connectors for electronic equipment – Tests and measurements – Part 2-1: Electrical continuity and contact resistance tests – Test 2a: Contact resistance – Millivolt level method*

IEC 60512-3-1, *Connectors for electronic equipment – Tests and measurements – Part 3-1: Insulation tests – Test 3a: Insulation resistance*

IEC 60512-4-1, *Connectors for electronic equipment – Tests and measurements – Part 4-1: Voltage stress tests – Test 4a: Voltage proof*

IEC 60512-5-2, *Connectors for electronic equipment – Tests and measurements – Part 5-2: Current-carrying capacity tests – Test 5b: Current-temperature derating*

IEC 60512-6-3, *Connectors for electronic equipment – Tests and measurements – Part 6-3: Dynamic stress tests – Test 6c: Shock*

IEC 60512-6-4, *Connectors for electronic equipment – Tests and measurements – Part 6-4: Dynamic stress tests – Test 6d: Vibration (sinusoidal)*

IEC 60512-9-1, *Connectors for electronic equipment – Tests and measurements – Part 9-1: Endurance tests – Test 9a: Mechanical operation*

IEC 60512-11-3, *Connectors for electronic equipment – Tests and measurements – Part 11-3: Climatic tests – Test 11c: Damp heat, steady state*

IEC 60512-11-4, *Connectors for electronic equipment – Tests and measurements – Part 11-4: Climatic tests – Test 11d: Rapid change of temperature*

IEC 60512-11-7, *Connectors for electronic equipment – Tests and measurements – Part 11-7: Climatic tests – Test 11g: Flowing mixed gas corrosion test*

IEC 60512-11-9, *Connectors for electronic equipment – Tests and measurements – Part 11-9: Climatic tests – Test 11i: Dry heat*

IEC 60512-11-10, *Connectors for electronic equipment – Tests and measurements – Part 11-10: Climatic tests – Test 11j: Cold*

IEC 60512-13-2, *Connectors for electronic equipment – Tests and measurements – Part 13-2: Mechanical operation tests – Test 13b: Insertion and withdrawal forces*

IEC 60512-15-6, *Connectors for electronic equipment – Tests and measurements – Part 15-6: Connector tests (mechanical) – Test 15f: Effectiveness of connector coupling devices*

IEC 60512-26-100, *Connectors for electronic equipment – Tests and measurements – Part 26-100: Measurement setup, test and reference arrangements and measurements for connectors according to IEC 60603-7 – Tests 26a to 26g*

IEC 61076-1:2006, *Connectors for electronic equipment – Product requirements – Part 1: Generic specification*

IEC 61076-3, *Connectors for electronic equipment – Product requirements – Part 3: Rectangular connectors –Sectional specification*

3 Terms and definitions

For the purposes of this document, the terms and definitions given in IEC 60050-581, IEC 61076-1, IEC 61076-3 and IEC 60512-1 apply.

ISO and IEC maintain terminological databases for use in standardization at the following addresses:

- IEC Electropedia: available at http://www.electropedia.org/
- ISO Online browsing platform: available at http://www.iso.org/obp

4 Mating information

4.1 General

Dimensions are given in millimetres. Drawings are shown in third-angle projection. The shape of connectors may deviate from those given in Figures 1 to 6 and Tables 1 to 5 as long as the specified dimensions are not changed.

4.2 Contacts – mating conditions

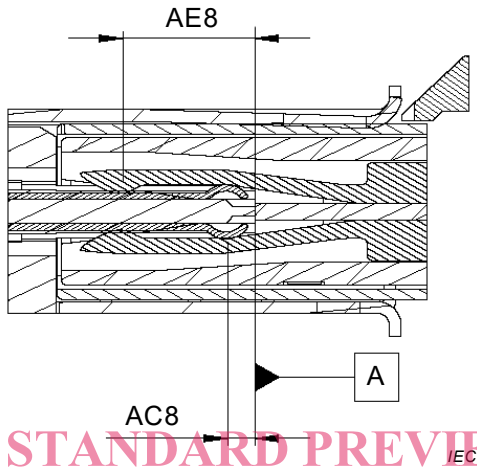

Figure 1 – Contact interface dimensions with a free (male) connector (right side) mated with a fixed (female) connector (left side)

Table 1 – Dimensions for Figure 1

Dimension designation	Minimum	Nominal	Maximum
AC8	0,7	0,8	0,9
AE8	3,7	3,8	3,9

4.3 Fixed connector Type I

(Dimensions in millimetres)

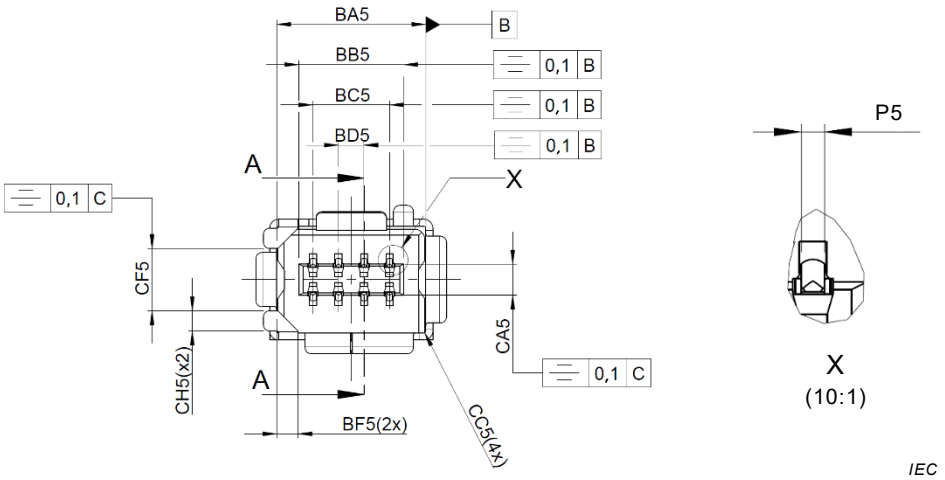

Detail A: contacts shall be located within their individual contact zone in the indicated area P5.

Section A-A: see Figure 3.

Figure 2a – Fixed female connector Type I – mating side view

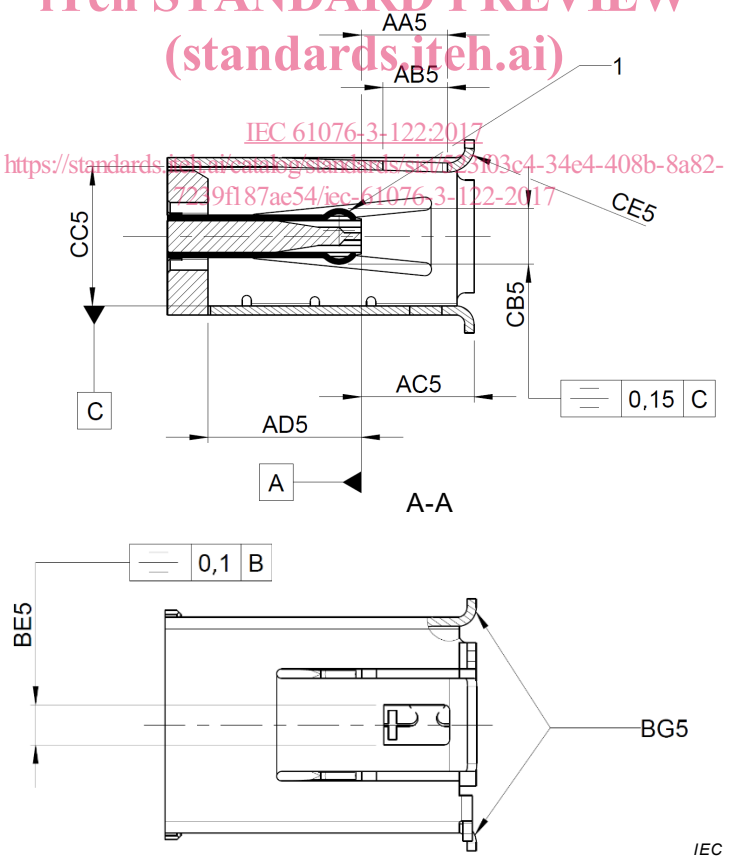

NOTE Preferred free connector stop surface.

Figure 2b – Fixed (female) connector – section A-A with top view

Figure 2 – Fixed female connector Type I

Table 2 – Dimensions for Figure 2

(Dimensions in millimetres)

Dimension designation	Minimum	Nominal	Maximum
AA5	3,1	3,2	3,3
AB5	2,3	2,4	2,5
AC5	4,2	4,3	4,4
AD5	5,7	5,8	5,9
BA5	7,35	7,4	7,5
BB5	5,1	5,2	5,3
BC5	3,88	3,9	3,95
BD5	1,15	1,2	1,3
BE5	1,4	1,5	1,6
BF5	0,95	1,05	1,1
BG5	R 0,65	R 0,7	R 0,75
CA5	1,45	1,5	1,55
CB5	2	2,1	2,2
CC5	5,25	5,3	5,35
CE5	R 0,9	R 1,0	R 1,05
CD5	1,05	1,1	1,15
CF5	3	3,1	3,2
P5	0,25	0,3	0,35

4.4 Free connector Type I

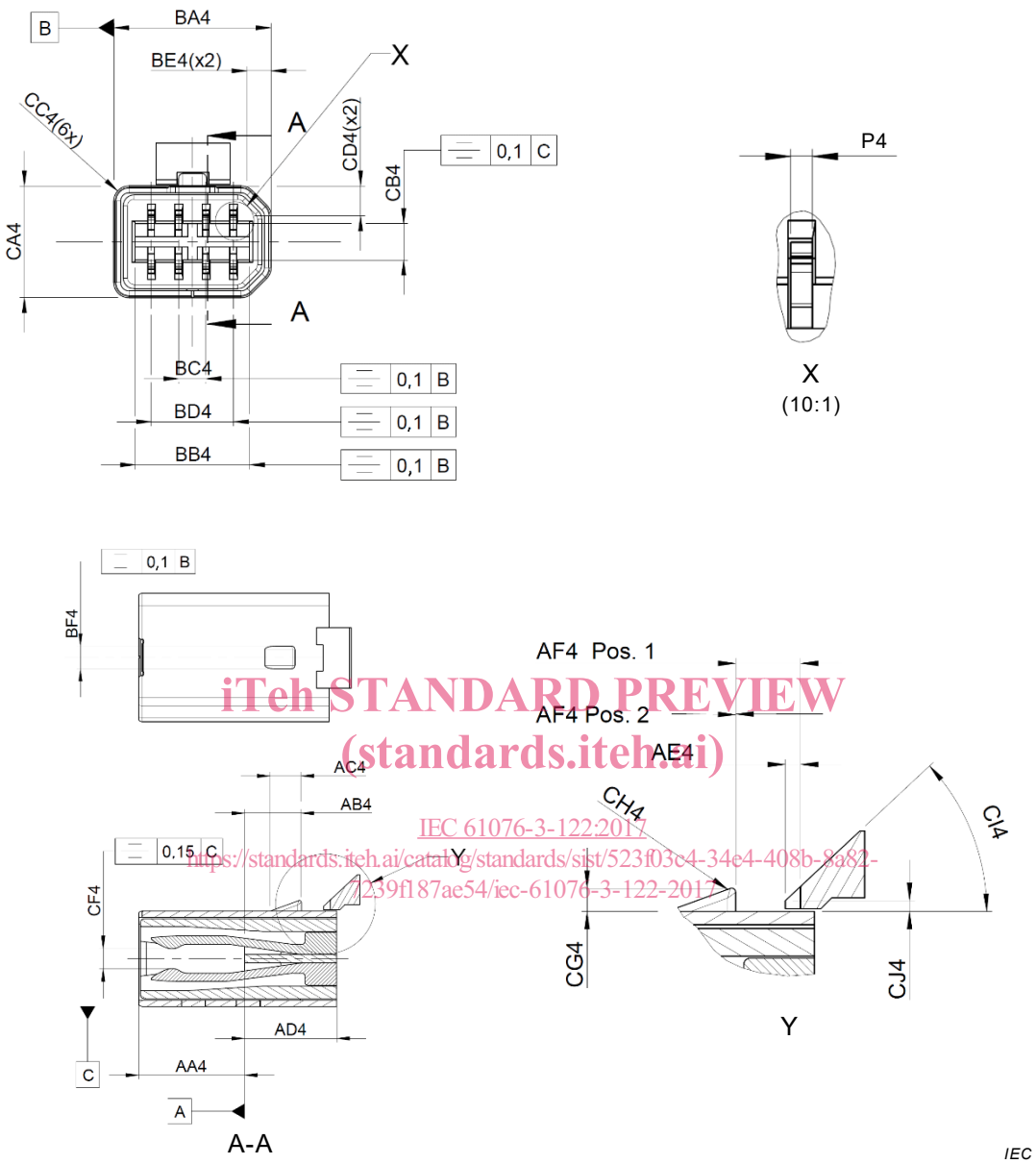

Figure 3 – Free male connector Type I

Table 3 – Dimensions for Figure 3

(Dimensions in millimetres)

Dimension designation	Minimum	Nominal	Maximum
AA4	5,7	5,8	5,9
AB4	2,9	3	3,1
AC4	1,6	1,7	1,8
AD4	4,9	5	5,1
AE4	0,25	0,35	0,35
AF4 pos. 1	1,6	1,65	1,7
AF4 pos. 2	0	0,05	0,1
CA4	5,15	5,1	5,23
CB4	1,65	1,7	1,7
CC4	R 0,65	R 0,7	R 0,7
CD4	1,25	1,3	1,4
CF4	1	1	1,1
CG4	0,45	0,5	0,55
CH4	R 0,05	R 0,1	R 0,15
CI4	41°	43°	45°
CJ4	0,17	0,2	0,25
BA4	7,24	7,3	7,34
BB4	5,27	5,3	5,33
BC4	1,22	1,27	1,3
BD4	3,7	3,8	3,9
BE4	1,07	1,1	1,13
BF4	1,2	1,3	1,4
P4	0,25	0,3	0,35