IEC 62976

Edition 1.0 2017-05

INTERNATIONAL STANDARD

NORME INTERNATIONALE

Industrial non-destructive testing equipment – Electron linear accelerator

Appareils destinés aux essais non destructifs pour le secteur industriel – Accélérateur électronique linéaire

IEC 62976:2017-05(en-fr)

IEC Central Office
3, rue de Varembé
CH-1211 Geneva 20
Switzerland

Tel.: +41 22 919 02 11
Fax: +41 22 919 03 00
info@iec.ch
www.iec.ch

About the IEC
The International Electrotechnical Commission (IEC) is the leading global organization that prepares and publishes International Standards for all electrical, electronic and related technologies.

About IEC publications
The technical content of IEC publications is kept under constant review by the IEC. Please make sure that you have the latest edition, a corrigenda or an amendment might have been published.

IEC Catalogue - webstore.iec.ch/catalogue
The stand-alone application for consulting the entire bibliographical information on IEC International Standards, Technical Specifications, Technical Reports and other documents. Available for PC, Mac OS, Android Tablets and iPad.

IEC publications search - www.iec.ch/searchpub
The advanced search enables to find IEC publications by a variety of criteria (reference number, text, technical committee,…). It also gives information on projects, replaced and withdrawn publications.

IEC Just Published - webstore.iec.ch/justpublished
Stay up to date on all new IEC publications. Just Published details all new publications released. Available online and also once a month by email.

Electropedia - www.electropedia.org
The world's leading online dictionary of electronic and electrical terms containing 20 000 terms and definitions in English and French, with equivalent terms in 16 additional languages. Also known as the International Electrotechnical Vocabulary (IEV) online.

IEC Glossary - std.iec.ch/glossary
65 000 electrotechnical terminology entries in English and French extracted from the Terms and Definitions clause of IEC publications issued since 2002. Some entries have been collected from earlier publications of IEC TC 37, 77, 86 and CISPR.

IEC Customer Service Centre - webstore.iec.ch/csc
If you wish to give us your feedback on this publication or need further assistance, please contact the Customer Service Centre: csc@iec.ch.

A propos de l'IEC
La Commission Electrotechnique Internationale (IEC) est la première organisation mondiale qui élabore et publie des Normes internationales pour tout ce qui a trait à l'électricité, à l'électronique et aux technologies apparentées.

A propos des publications IEC
Le contenu technique des publications IEC est constamment revu. Veuillez vous assurer que vous possédez l'édition la plus récente, un corrigendum ou amendement peut avoir été publié.

Catalogue IEC - webstore.iec.ch/catalogue
Application autonome pour consulter tous les renseignements bibliographiques sur les Normes internationales, Spécifications techniques, Rapports techniques et autres documents de l'IEC. Disponible pour PC, Mac OS, tablettes Android et iPad.

Recherche de publications IEC - www.iec.ch/searchpub
La recherche avancée permet de trouver des publications IEC en utilisant différents critères (numéro de référence, texte, comité d'études,…). Elle donne aussi des informations sur les projets et les publications remplacées ou retirées.

IEC Just Published - webstore.iec.ch/justpublished
Restez informé sur les nouvelles publications IEC. Just Published détaille les nouvelles publications parues. Disponible en ligne et aussi une fois par mois par email.

Electropedia - www.electropedia.org
Le premier dictionnaire en ligne de termes électroniques et électriques. Il contient 20 000 termes et définitions en anglais et en français, ainsi que les termes équivalents dans 16 langues additionnelles. Egalement appelé Vocabulaire Electrotechnique International (IEV) en ligne.

Glossaire IEC - std.iec.ch/glossary
65 000 entrées terminologiques électrotechniques, en anglais et en français, extraites des articles Termes et Définitions des publications IEC parues depuis 2002. Plus certaines entrées antérieures extraites des publications des CE 37, 77, 86 et CISPR de l'IEC.

Service Clients - webstore.iec.ch/csc
Si vous désirez nous donner des commentaires sur cette publication ou si vous avez des questions contactez-nous: csc@iec.ch.

IEC 62976

Edition 1.0 2017-05

INTERNATIONAL STANDARD

NORME INTERNATIONALE

Industrial non-destructive testing equipment – Electron linear accelerator

Appareils destinés aux essais non destructifs pour le secteur industriel – Accélérateur électronique linéaire

INTERNATIONAL
ELECTROTECHNICAL
COMMISSION

COMMISSION
ELECTROTECHNIQUE
INTERNATIONALE

ICS 27.120.01

ISBN 978-2-8322-4128-8

Warning! Make sure that you obtained this publication from an authorized distributor.
Attention! Veuillez vous assurer que vous avez obtenu cette publication via un distributeur agréé.

CONTENTS

INTERNATIONAL ELECTROTECHNICAL COMMISSION

INDUSTRIAL NON-DESTRUCTIVE TESTING EQUIPMENT – ELECTRON LINEAR ACCELERATOR

FOREWORD

1) The International Electrotechnical Commission (IEC) is a worldwide organization for standardization comprising all national electrotechnical committees (IEC National Committees). The object of IEC is to promote international co-operation on all questions concerning standardization in the electrical and electronic fields. To this end and in addition to other activities, IEC publishes International Standards, Technical Specifications, Technical Reports, Publicly Available Specifications (PAS) and Guides (hereafter referred to as "IEC Publication(s)"). Their preparation is entrusted to technical committees; any IEC National Committee interested in the subject dealt with may participate in this preparatory work. International, governmental and non-governmental organizations liaising with the IEC also participate in this preparation. IEC collaborates closely with the International Organization for Standardization (ISO) in accordance with conditions determined by agreement between the two organizations.

2) The formal decisions or agreements of IEC on technical matters express, as nearly as possible, an international consensus of opinion on the relevant subjects since each technical committee has representation from all interested IEC National Committees.

3) IEC Publications have the form of recommendations for international use and are accepted by IEC National Committees in that sense. While all reasonable efforts are made to ensure that the technical content of IEC Publications is accurate, IEC cannot be held responsible for the way in which they are used or for any misinterpretation by any end user.

4) In order to promote international uniformity, IEC National Committees undertake to apply IEC Publications transparently to the maximum extent possible in their national and regional publications. Any divergence between any IEC Publication and the corresponding national or regional publication shall be clearly indicated in the latter.

5) IEC itself does not provide any attestation of conformity. Independent certification bodies provide conformity assessment services and, in some areas, access to IEC marks of conformity. IEC is not responsible for any services carried out by independent certification bodies.

6) All users should ensure that they have the latest edition of this publication.

7) No liability shall attach to IEC or its directors, employees, servants or agents including individual experts and members of its technical committees and IEC National Committees for any personal injury, property damage or other damage of any nature whatsoever, whether direct or indirect, or for costs (including legal fees) and expenses arising out of the publication, use of, or reliance upon, this IEC Publication or any other IEC Publications.

8) Attention is drawn to the Normative references cited in this publication. Use of the referenced publications is indispensable for the correct application of this publication.

9) Attention is drawn to the possibility that some of the elements of this IEC Publication may be the subject of patent rights. IEC shall not be held responsible for identifying any or all such patent rights.

International Standard IEC 62976 has been prepared by technical committee 45: Nuclear instrumentation.

The text of this standard is based on the following documents:

FDIS	Report on voting
45/821/FDIS	45/824/RVD

Full information on the voting for the approval of this standard can be found in the report on voting indicated in the above table.

This publication has been drafted in accordance with the ISO/IEC Directives, Part 2.

The committee has decided that the contents of this publication will remain unchanged until the stability date indicated on the IEC web site under "http://webstore.iec.ch" in the data related to the specific publication. At this date, the publication will be

- reconfirmed,
- withdrawn,
- replaced by a revised edition, or
- amended.

INDUSTRIAL NON-DESTRUCTIVE TESTING EQUIPMENT – ELECTRON LINEAR ACCELERATOR

1 Scope

This document gives the rules of naming, technical requirements, test methods, inspection, marking, packaging, transportation, storage and accompanying documents for electron linear accelerator equipment for Non-Destructive Testing (NDT).

This document applies to NDT electron linear accelerator equipment in the X-ray energy range of 1 MeV to 15 MeV, including the accelerator equipment for radiographic film, computed radiography with imaging plates, real-time imaging, digital detector array and industrial computerized tomography.

2 Normative references

The following documents are referred to in the text in such a way that some or all of their content constitutes requirements of this document. For dated references, only the edition cited applies. For undated references, the latest edition of the referenced document (including any amendments) applies.

ISO/IEC Guide 37:2012, *Instructions for use of products by consumers*

ISO 780:2015, *Packaging – Distribution packaging – Graphical symbols for handling and storage of packages*

ISO 19232-1:2013, *Non-destructive testing – Image quality of radiographs – Part 1: Determination of the image quality value using wire-type image quality indicators*

3 Terms and definitions

For the purposes of this document, the following terms and definitions apply.

ISO and IEC maintain terminological databases for use in standardization at the following addresses:

- IEC Electropedia: available at http://www.electropedia.org/
- ISO Online browsing platform: available at http://www.iso.org/obp

3.1
target
area on the surface of accelerating tube outlet on which the electron beam impinges and from which the primary beam of X-rays is emitted

3.2
linear electron accelerator
LINAC
apparatus for producing high energy electrons by accelerating them along a waveguide. The electrons strike a target to produce X-rays

Note 1 to entry: NDT electron linear accelerator, hereinafter referred to as the accelerator.

[SOURCE: ISO 5576:1997, 2.84]

3.3
X-rays
penetrating electromagnetic radiation, within the approximate wavelength range of 1 nm to 0,0001 nm, produced when high velocity electrons impinge on a metal target

[SOURCE: ISO 5576:1997, 2.129]

3.4
X-ray beam energy
E
maximum X-ray energy in the continuous emission spectrum, equal to the product of the electron charge and the accelerating voltage

Note 1 to entry: *E* is expressed in megaelectronvolts (MeV).

3.5
wedge X-ray field
X-radiation field with a dose distribution that changes approximately linearly with distance from the beam edge along a line perpendicular to and passing through the radiation beam axis

[SOURCE: IEC 60976, 2007, 3.32]

3.6
half-value layer

thickness of a specified material, which attenuates under narrow beam conditions X- radiation with a particular spectrum to an extent such that the air kerma rate, exposure rate or absorbed dose rate is reduced to one half of the value that is measured without the material. The half-value layer (HVL) is expressed in suitable submultiples of the metre together with the material

[SOURCE: IEC 60601-1-3, 2008, 3.27]

3.7
X-ray beam focal spot
d
dimension across the focal spot of an accelerating tube, measured perpendicular to the central beam axis

Note 1 to entry: *d* is expressed in millimetres (mm).

3.8
X-ray beam homogeneity
ratio, expressed as a percent, of the dose rate in a plane 1 m from the target and normal to the beam central axis, and acquired at a specified angle from the central axis, to the dose rate in the plane and on the beam axis

3.9
X-ray beam air kerma rate
K
volume of ionization caused by the x-ray beam in air per unit time at 1 m away from target

Note 1 to entry: *K* is expressed in centigrays per minute (cGy/min).

3.10
X-ray beam asymmetry
ratio of the difference to the average values of the dose rates measured at equal distances from the central beam axis and in a vertical plane normal to the x-ray beam

Note 1 to entry: This ratio is expressed as a percentage.

3.11
X-ray sensitivity
ratio of the minimum defect size that can be observed in the detector to the thickness of the penetrated material

Note 1 to entry: This ratio is expressed as a percentage.

3.12
X-ray head
part of an X-ray installation that contains the accelerating tube and its shield

4 Equipment sets, names and work conditions

4.1 Equipment sets

Generally, the equipment consists of the following components:

a) X-ray head,
b) modulator,
c) temperature control unit (TCU),
d) control system,
e) power distribution cabinet,
f) safety interlock system,
g) interconnecting cables (X-ray head to modulator, modulator to console) and hoses (TCU to X-ray head).

4.2 Name convention

The naming rules of the equipment are shown in Figure 1.

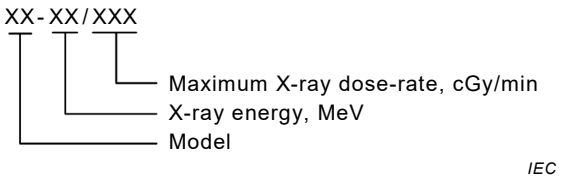

Figure 1 – Naming convention

The specifications of several commonly used accelerator models are shown in Table 1.

Table 1 – Specifications of several commonly used accelerator models

Model No.	Specification	
	X-ray beam energy MeV	Maximum X-ray dose rate cGy/min
XX-2/200	2	200
XX-4/500	4	500
XX-6/1000	6	1 000
XX-9/3000	9	3 000
XX-12/5000	12	5 000
XX-15/12000	15	12 000

4.3 Operating conditions

4.3.1 Environmental requirement

- environment temperature: (5 to 40) °C;
- relative humidity: ≤90 %.

4.3.2 Power supply

- voltage: 380 V ±10 % three-phase four-wire AC system;
- frequency: 50 Hz ±2 % / 60 Hz ±2 %;
- power supply: it is put forward in the product manual according to the accelerator model;
- grounding resistance: special grounding resistance of modulator is less than 4 Ω.

5 Technical requirements

5.1 Appearance

The surface shall be smooth, uniform color, no obvious scratches, bumps or holes.

5.2 Control system

5.2.1 Design principle

The design of the control system shall ensure the safety of the operator, the device and the delivered dose.

5.2.2 Operation of start and stop

Operation of X-ray source start and stop shall be executed in the control console.

5.2.3 Functions of control system

The basic functions of the control system shall include:

- normal start-up and shut-down,
- display of the status of normal, fault, alarm and auto-stop,
- display of the main operational parameters,
- safety interlock,
- emergency stop.

5.3 Performance

5.3.1 X-ray beam energy

Commonly used X-ray beam energies of accelerators are shown in Table 2 and the corresponding half value layer should not be less than the value in Table 2.

Table 2 – Half value layer of materials corresponding to commonly used X-ray beam energies

X-ray beam energy MeV	Steel (Material density: 7,8 × 10^3 kg/m^3) mm	Plexiglas (Material density:1,7 × 10^3 kg/m^3) mm
1	16 ± 0,5	61 ± 2
2	20 ± 0,5	84 ± 2
4	25 ± 0,5	116 ± 2
6	28 ± 0,5	138 ± 2
9	30 ± 0,5	149 ± 2
12	32 ± 0,5	178 ± 2
15	33 ± 0,5	204 ± 2

5.3.2 X-ray homogeneity

X-ray homogeneity shall not be less than the value in Table 3 by using a beam flattening filter.

Table 3 – X-ray homogeneity of commonly used X-ray beam energies

X-ray beam energy MeV	Subtended angle A between beam central axis and axis connecting the centre of focal spot with the point of measurement located on the circumference (°)	X-ray homogeneity %
1	7,5	80
2	7,5	78
4	7,5	75
6	7,5	62
9	7,5	55
12	6,0	50
15	6,0	45

5.3.3 X-ray beam air kerma rate

X-ray beam air kerma rate shall achieve the value shown in Table 4 (can be reduced based on purpose).

Table 4 – X-ray beam air kerma rate of different models

X-ray beam energy MeV	X-ray beam dose rate cGy/min
1	20
2	200
4	500
6	1 000
9	3 000
12	5 000
15	12 000

5.3.4 X-ray beam focal spot

The diameter of the X-ray spot shall be less than or equal to 2,0 mm when the X-ray beam energy is less than 9 MeV; the diameter of X-ray spot shall be less than or equal to 3,5 mm when X-ray beam energy is equal to or higher than 9 MeV.

5.3.5 X-ray beam asymmetry

X-ray beam asymmetry shall be less than 3 % at 7,5° away from X-ray beam center axis when the X-ray beam energy is less than or equal to 9 MeV; X-ray beam asymmetry shall be less than 5 % at 6° away from X-ray beam center axis when X-ray beam energy is higher than 9 MeV.

5.3.6 X-ray sensitivity

In the range of the X-ray beam energy and the corresponding equivalent steel thickness stated in Table 5, X-ray sensitivity shall be less than 1 % as determined by linear densitometry for imaging detection.

Table 5 – Detection range of equivalent steel thickness corresponding to commonly used X-ray beam energies

X-ray beam energy MeV	Range of equivalent steel thickness mm
1	36 to 150
2	40 to 200
4	50 to 250
6	50 to 280
9	76 to 380
12	100 to 420
15	100 to 460
NOTE Equivalent steel thickness is the conversion of different plate thickness based on the density of 7,8 x 10^3 kg/m^3 steel.	

5.3.7 Dose leakage

a) X-ray dose leakage

A measure of leakage is given by the ratio of X-ray dose rate 1 m away from the target in a variety of directions to the X-ray dose rate on the central beam axis. This shall be expressed as a percentage and shall be less than 0,1 %.

b) Neutron dose leakage (if the accelerator energy is higher than or equal to 10 MeV)

Neutron dose rate shall be no more than 0,01 mSv/h 1 m away from the target beyond the X-ray field formed by the forward collimator and no more than 0,001 mSv/h in other places.

5.4 Electrical safety

5.4.1 Protective grounding

Separated electric shock protection is essential. The resistance between metal surface and grounding terminal shall not be more than 0,1 Ω.

5.4.2 Insulation resistance

The insulation resistance between wires (including phase line and zero line) and ground of each independent electrical part of the equipment should not be less than 1 MΩ when the test voltage (AC RMS or DC average) reaches to 1 000 V.

5.4.3 Dielectric strength

Electrical equipment with electrical grounding should tolerate the dielectric strength testing of 2 000 V (AC RMS or DC average) with no breakdown and no repeated arcing during the test.

5.4.4 Protection against electric shock

Electrical equipment of the accelerator should have anti shock functionality under the condition of normal use, the touchable parts should not be hazardous or live. The voltage between accessible component and ground terminal should be less than AC 30 V or DC 60 V. The warning symbols for “high voltage” shall be posted near the high voltage device.

5.5 Reliability

5.5.1 Continuous operation

The device shall be able to operate for 8 h with less than 4 interruptions lasting no more than 30 min each.

5.5.2 Recovery

The time of reaching the normal work status shall be less than 15 min when the downtime without fault is longer than 1 h after shutdown.

5.5.3 Restart

The time of reaching the normal work status shall be less than 150 min when the downtime without fault is longer than 48 h after shutdown.

6 Test methods

6.1 General requirements

6.1.1 Testing conditions

The test shall be carried out under the conditions of Table 6.

Table 6 – Testing conditions

Environmental parameter	Reference value	Range
Temperature	25 °C	5 °C to 40 °C
Relative humidity	65 %	≤90 %
Atmospheric pressure	101,3 kPa	86 kPa to 106 kPa
Voltage (alternating current)	380 V	380 V ± 10 %
Frequency (alternating current)	50 Hz /60 Hz	50 Hz ± 2 % / 60 Hz ± 2 %

6.1.2 Instruments and devices

6.1.2.1 General

Within the validity verification, the test equipment and instruments should meet the test requirements.

6.1.2.2 X-ray dose meter

An X-ray dose meter is used to measure the in-beam air kerma rate.

6.1.2.3 Wire-type image quality indicators

Wire-type image quality indicators complying with ISO 19232-1:2013 shall be used to measure X-ray sensitivity.

6.1.2.4 “Sandwich” test module

The “Sandwich” test module is used to measure the X-ray beam focal spot size. It is closely superposed by the rectangular (250 mm x 60 mm) copper or lead foil (with white color) and plastic pieces (with black color) alternately as shown in Figure 2, the foil thickness h1 is not more than 0,1 mm, plastic film thickness h2 is not more than 0,3 mm, and the superimposing thickness is not less than 60 mm.

Dimensions in millimetres

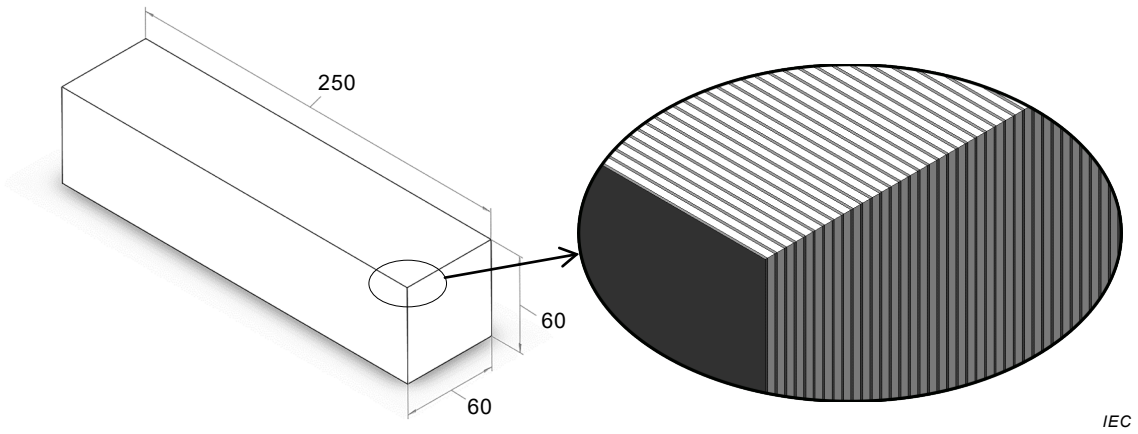

Figure 2 – Sketch map of the test module

6.1.2.5 Copper block with a swivelling edge

The copper block (60 mm x 60 mm x 16 mm) with a swiveling edge ± 15° is a test block using as alternative method for the focal spot measurement, see Figure 3.