IEC 61952-1

Edition 1.0 2019-04

INTERNATIONAL STANDARD

NORME INTERNATIONALE

Insulators for overhead lines – Composite line post insulators for AC systems with a nominal voltage greater than 1 000 V – Part 1: definitions, end fittings and designations

Isolateurs pour lignes aériennes – Isolateurs composites rigides à socle pour systèmes à courant alternatif de tension nominale supérieure à 1 000 V – Partie 1: Définitions, armatures d'extrémité et désignations

IEC 61952-1:-2019-04(en-fr)

IEC Central Office
3, rue de Varembé
CH-1211 Geneva 20
Switzerland

Tel.: +41 22 919 02 11
info@iec.ch
www.iec.ch

About the IEC
The International Electrotechnical Commission (IEC) is the leading global organization that prepares and publishes International Standards for all electrical, electronic and related technologies.

About IEC publications
The technical content of IEC publications is kept under constant review by the IEC. Please make sure that you have the latest edition, a corrigendum or an amendment might have been published.

IEC publications search - webstore.iec.ch/advsearchform
The advanced search enables to find IEC publications by a variety of criteria (reference number, text, technical committee,…). It also gives information on projects, replaced and withdrawn publications.

IEC Just Published - webstore.iec.ch/justpublished
Stay up to date on all new IEC publications. Just Published details all new publications released. Available online and once a month by email.

IEC Customer Service Centre - webstore.iec.ch/csc
If you wish to give us your feedback on this publication or need further assistance, please contact the Customer Service Centre: sales@iec.ch.

Electropedia - www.electropedia.org
The world's leading online dictionary on electrotechnology, containing more than 22 000 terminological entries in English and French, with equivalent terms in 16 additional languages. Also known as the International Electrotechnical Vocabulary (IEV) online.

IEC Glossary - std.iec.ch/glossary
67 000 electrotechnical terminology entries in English and French extracted from the Terms and Definitions clause of IEC publications issued since 2002. Some entries have been collected from earlier publications of IEC TC 37, 77, 86 and CISPR.

A propos de l'IEC
La Commission Electrotechnique Internationale (IEC) est la première organisation mondiale qui élabore et publie des Normes internationales pour tout ce qui a trait à l'électricité, à l'électronique et aux technologies apparentées.

A propos des publications IEC
Le contenu technique des publications IEC est constamment revu. Veuillez vous assurer que vous possédez l'édition la plus récente, un corrigendum ou amendement peut avoir été publié.

Recherche de publications IEC - webstore.iec.ch/advsearchform
La recherche avancée permet de trouver des publications IEC en utilisant différents critères (numéro de référence, texte, comité d'études,…). Elle donne aussi des informations sur les projets et les publications remplacées ou retirées.

IEC Just Published - webstore.iec.ch/justpublished
Restez informé sur les nouvelles publications IEC. Just Published détaille les nouvelles publications parues. Disponible en ligne et une fois par mois par email.

Service Clients - webstore.iec.ch/csc
Si vous désirez nous donner des commentaires sur cette publication ou si vous avez des questions contactez-nous: sales@iec.ch.

Electropedia - www.electropedia.org
Le premier dictionnaire d'électrotechnologie en ligne au monde, avec plus de 22 000 articles terminologiques en anglais et en français, ainsi que les termes équivalents dans 16 langues additionnelles. Egalement appelé Vocabulaire Electrotechnique International (IEV) en ligne.

Glossaire IEC - std.iec.ch/glossary
67 000 entrées terminologiques électrotechniques, en anglais et en français, extraites des articles Termes et Définitions des publications IEC parues depuis 2002. Plus certaines entrées antérieures extraites des publications des CE 37, 77, 86 et CISPR de l'IEC.

IEC 61952-1

Edition 1.0 2019-04

INTERNATIONAL STANDARD

NORME INTERNATIONALE

Insulators for overhead lines – Composite line post insulators for AC systems with a nominal voltage greater than 1 000 V – Part 1: definitions, end fittings and designations

Isolateurs pour lignes aériennes – Isolateurs composites rigides à socle pour systèmes à courant alternatif de tension nominale supérieure à 1 000 V – Partie 1: Définitions, armatures d'extrémité et désignations

INTERNATIONAL
ELECTROTECHNICAL
COMMISSION

COMMISSION
ELECTROTECHNIQUE
INTERNATIONALE

ICS 29.080.10; 29.240.20

ISBN 978-2-8322-7993-9

Warning! Make sure that you obtained this publication from an authorized distributor.
Attention! Veuillez vous assurer que vous avez obtenu cette publication via un distributeur agréé.

CONTENTS

INTERNATIONAL ELECTROTECHNICAL COMMISSION

INSULATORS FOR OVERHEAD LINES – COMPOSITE LINE POST INSULATORS FOR AC SYSTEMS WITH A NOMINAL VOLTAGE GREATER THAN 1 000 V –

Part 1: Definitions, end fittings and designations

FOREWORD

1) The International Electrotechnical Commission (IEC) is a worldwide organization for standardization comprising all national electrotechnical committees (IEC National Committees). The object of IEC is to promote international co-operation on all questions concerning standardization in the electrical and electronic fields. To this end and in addition to other activities, IEC publishes International Standards, Technical Specifications, Technical Reports, Publicly Available Specifications (PAS) and Guides (hereafter referred to as "IEC Publication(s)"). Their preparation is entrusted to technical committees; any IEC National Committee interested in the subject dealt with may participate in this preparatory work. International, governmental and non-governmental organizations liaising with the IEC also participate in this preparation. IEC collaborates closely with the International Organization for Standardization (ISO) in accordance with conditions determined by agreement between the two organizations.

2) The formal decisions or agreements of IEC on technical matters express, as nearly as possible, an international consensus of opinion on the relevant subjects since each technical committee has representation from all interested IEC National Committees.

3) IEC Publications have the form of recommendations for international use and are accepted by IEC National Committees in that sense. While all reasonable efforts are made to ensure that the technical content of IEC Publications is accurate, IEC cannot be held responsible for the way in which they are used or for any misinterpretation by any end user.

4) In order to promote international uniformity, IEC National Committees undertake to apply IEC Publications transparently to the maximum extent possible in their national and regional publications. Any divergence between any IEC Publication and the corresponding national or regional publication shall be clearly indicated in the latter.

5) IEC itself does not provide any attestation of conformity. Independent certification bodies provide conformity assessment services and, in some areas, access to IEC marks of conformity. IEC is not responsible for any services carried out by independent certification bodies.

6) All users should ensure that they have the latest edition of this publication.

7) No liability shall attach to IEC or its directors, employees, servants or agents including individual experts and members of its technical committees and IEC National Committees for any personal injury, property damage or other damage of any nature whatsoever, whether direct or indirect, or for costs (including legal fees) and expenses arising out of the publication, use of, or reliance upon, this IEC Publication or any other IEC Publications.

8) Attention is drawn to the Normative references cited in this publication. Use of the referenced publications is indispensable for the correct application of this publication.

9) Attention is drawn to the possibility that some of the elements of this IEC Publication may be the subject of patent rights. IEC shall not be held responsible for identifying any or all such patent rights.

International Standard IEC 61952-1 has been prepared by IEC technical committee 36: Insulators.

This bilingual version (2020-04) corresponds to the monolingual English version, published in 2019-04.

The text of this standard is based on the following documents:

FDIS	Report on voting
36/435/FDIS	36/441/RVD

Full information on the voting for the approval of this International Standard can be found in the report on voting indicated in the above table.

The French version of this standard has not been voted upon.

This document has been drafted in accordance with the ISO/IEC Directives, Part 2.

A list of all parts in the IEC 61952 series, published under the general title *Insulators for overhead lines – Composite line post insulators for AC systems with a nominal voltage greater than 1 000 V*, can be found on the IEC website.

The committee has decided that the contents of this document will remain unchanged until the stability date indicated on the IEC website under "http://webstore.iec.ch" in the data related to the specific document. At this date, the document will be

- reconfirmed,
- withdrawn,
- replaced by a revised edition, or
- amended.

INTRODUCTION

This part of IEC 61952 is intended to give the main mechanical and dimensional characteristics of composite line post insulators and their fittings in order to ensure their interchangeability. Since line post insulators are usually subjected to combined loads (for example vertical due to the conductor plus compressive and lateral due to the pole being at a line corner or turn), only the MDCL is given as a specified characteristic for the mechanical strength of the insulator.

Furthermore, composite line post insulators are often used in a braced configuration for higher voltages and mechanical loads. In these configurations the overall strength depends on the components and geometry of the whole assembly – including notably the buckling strength of the line post component which depends more on the core dimensions and flexibility than on ultimate flexural strength.

In order to address the matter of the strength of composite line post insulators under combined or complex loads some information is already given in Annex B of IEC 61952:2008 and by the IEEE [2][1]. It is intended to expand on this information in a second part of IEC 61952 which will give application guidelines and examples for common line post usage scenarios.

[1] Numbers in square brackets refer to the bibliography.

INSULATORS FOR OVERHEAD LINES – COMPOSITE LINE POST INSULATORS FOR AC SYSTEMS WITH A NOMINAL VOLTAGE GREATER THAN 1 000 V –

Part 1: Definitions, end fittings and designations

1 Scope

This part of IEC 61952 is applicable to composite line post insulators for AC overhead lines with a nominal voltage greater than 1 000 V and a frequency not greater than 100 Hz.

It also applies to line post insulators of similar design used in substations or on electric traction lines.

This document applies to line post insulators of composite type, generally with metallic couplings, with and without a base plate. It also applies to such insulators when used in complex structures. It does not apply to hollow insulators adapted for use as line post insulators.

The object of this document is to specify the main dimensions of the couplings to be used on the composite line post insulators in order to permit the assembly of insulators or fittings supplied by different manufacturers and to allow, whenever practical, interchangeability with existing installations.

It also specifies a standard designation system for composite line post insulators.

2 Normative references

The following documents are referred to in the text in such a way that some or all of their content constitutes requirements of this document. For dated references, only the edition cited applies. For undated references, the latest edition of the referenced document (including any amendments) applies.

IEC 60050-471, *International Electrotechnical Vocabulary – Part 471: Insulators*

IEC 60071-1, *Insulation co-ordination – Part 1: Definitions, principles and rules*

IEC 61952:2008, *Insulators for overhead lines – Composite line post insulators for A.C. systems with a nominal voltage greater than 1 000 V – Definitions, test methods and acceptance criteria*

3 Terms and definitions

For the purposes of this document, the terms and definitions given in IEC 60050-471 and IEC 61952 and the following apply.

ISO and IEC maintain terminological databases for use in standardization at the following addresses:

- IEC Electropedia: available at http://www.electropedia.org/
- ISO Online browsing platform: available at http://www.iso.org/obp

3.1
coupling
part of the end fitting designed for attachment of the composite line post insulator to line equipment, supporting structures, base plates or other insulators

3.2
core diameter
nominal diameter of the load-bearing core of the insulator

3.3
line end fitting
fitting at the end of the line post insulator to which the conductor or other live equipment is to be attached

Note 1 to entry: Line end fitting can be from metal or insulating material.

3.4
base end fitting
fitting at the end intended to be attached to the supporting structure, either directly or by an intermediate base or plate

3.5
base
intermediate hardware to allow attachment of the line post insulator to the supporting structure

3.6
reference cantilever load
RCL
North American practise for defining maximum admissible working load

3.7
maximum design cantilever load
MDCL
load level above which damage to the core begins to occur and which is the ultimate limit for service loads. This value and direction of the load are specified by the manufacturer

3.8
minimum lightning impulse withstand voltage
BIL
impulse voltage having a front time of 1,2 µs and a time to half-value of 50 µs

4 Mechanical, dimensional and electrical characteristics

4.1 Characteristics

Composite line post insulators are standardised by the following specified characteristics:

- maximum design cantilever load (MDCL);
- minimum lightning impulse withstand voltage (BIL);
- standard coupling codes;
- standard base plate code (if applicable).

Additional mechanical characteristics may be required for some applications (e.g. tensile strength, torsion strength). These characteristics do not form part of this document.

Core diameter does not form part of the specified characteristics of composite line post insulators; however some fitting dimensions depend on the core diameter. Common nominal core diameters (in mm) are as follows: 37, 40, 45, 51, 63, 76, 88, 102, 120, 130.

Creepage distance does not form part of the specified characteristics of composite line post insulators; however it may be included in the insulator designation.

All dimensions are expressed in millimetres. The dimensions apply to the finished product after any surface treatment.

4.2 Maximum design cantilever load (MDCL) and specified cantilever load (SCL)

Each insulator is characterised by the MDCL and SCL as defined in IEC 61952.

The manufacturer's recommended working cantilever load may be listed as the MDCL or the reference cantilever load (RCL) and may be as much as 50 % of the SCL.

4.3 Minimum lightning impulse withstand voltage class (BIL)

Composite line post insulators are divided into classes according to their standard rated lightning impulse withstand voltage according to IEC 60071-1. For convenience, the standard values (in kV) are reproduced as follows:

60, 75, 95, 125, 145, 170, 200, 250, 325, 380, 450, 550, 650, 750, 850, 950, 1 050, 1 175, 1 300, 1 425, 1 550, 1 675, 1 800, 1 950, 2 100, 2 550, 2 700.

NOTE Intermediate values are permitted and given in Tables 3 and 4.

Each class includes insulators of increasing length up to the next lightning impulse withstand voltage class.

4.4 Standard coupling codes

The couplings on composite line post insulators are designated by the codes given in Table 1. The typical major dimensions defining each size are indicated.

Unless otherwise specified, dimensions given in Table 1 are nominal and subject to the typical tolerances applicable to the type (threads, metric thread pitch – standard, cast elements, etc.). Metric bolts and tapping may be replaced by their UNC equivalent; this shall be clearly marked on all drawings. All dimensions are expressed in millimetres.

Table 1 – Types of couplings

DESIGNATION	TYPE OF COUPLING	Examples (non preferred values in brackets)	Usual practice	
			Line End	Base end
A	Tapped flange	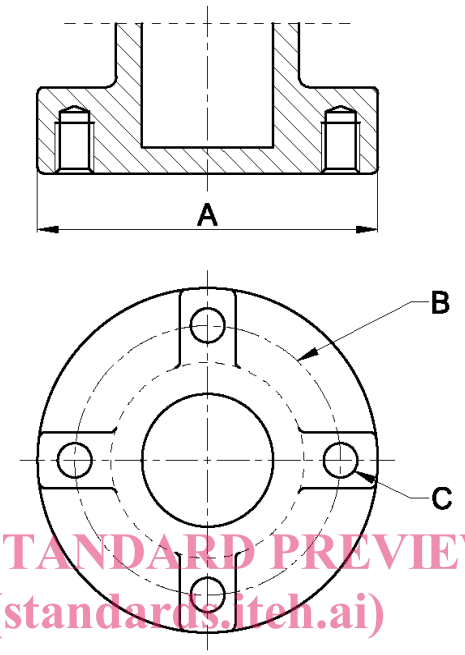	X	X

A	B	C
100	∅ 76	M12 x 16
160	∅ 127	M16 x 20
160	∅ 127	M16 x 24
165	∅ 127	M16 x 20
165	∅ 127	M20 x 24
165	∅ 127	M24 x 30
165	∅ 178	M24 x 30
Oversized thread		

DESIGNATION	TYPE OF COUPLING	Examples (non preferred values in brackets)	Usual practice	
			Line End	Base end
B	Stud pedestal	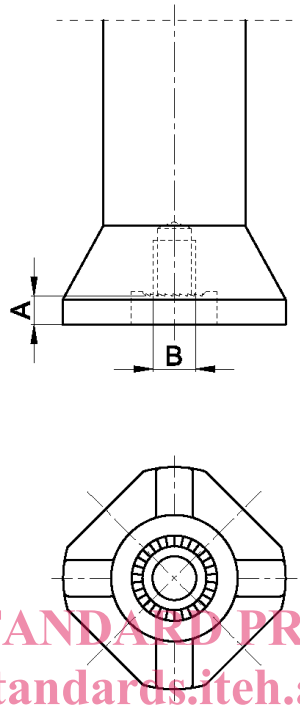 A | B 7 | M16 x 20 10 | M20 x 24 12 | M22 x 25 10 | M24 x 30		X
C	Clevis Often used with swivel base “S”,	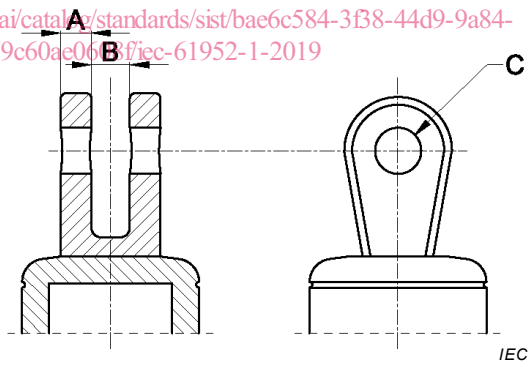 A | B | C 14 | 20 min. | ∅ 24 16 | 20 min. | ∅ 20 16 | 20 min. | ∅ 24	X	X

DESIGNATION	TYPE OF COUPLING	Examples (non preferred values in brackets)	Usual practice	
			Line End	Base end
D	Square flange	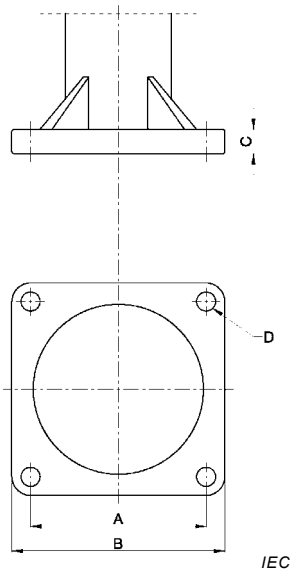 A: 165; B: 200; C: 23; D: ∅ 18	X	X
I	Integrated base(s)	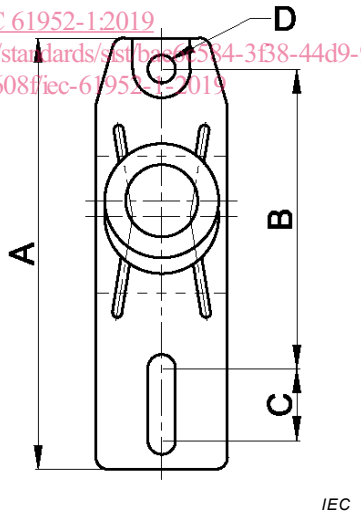 A: 357; B: 249; C: 61; D: ∅ 22 A: 355; B: 254; C: 50; D: ∅ 22 NOTE The base can be curved or flat.		X

<table>
<tr><th rowspan="2">DESIGNATION</th><th rowspan="2">TYPE OF COUPLING</th><th rowspan="2">Examples
(non preferred values in brackets)</th><th colspan="2">Usual practice</th></tr>
<tr><th>Line End</th><th>Base end</th></tr>
<tr><td>J</td><td>Integrated clamp</td><td>
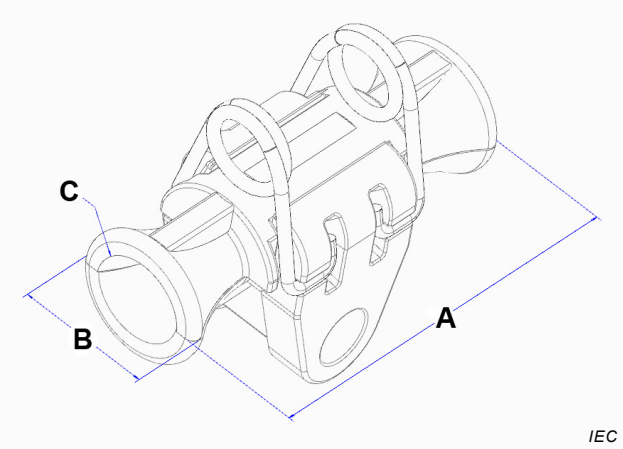

<table>
<tr><td>A</td><td>B</td><td>C</td></tr>
<tr><td>100 – 1750</td><td>40 – 160</td><td>∅ 7 – 38</td></tr>
</table>
</td><td>X</td><td></td></tr>
<tr><td>K</td><td>Horizontal trunnion fitting</td><td>
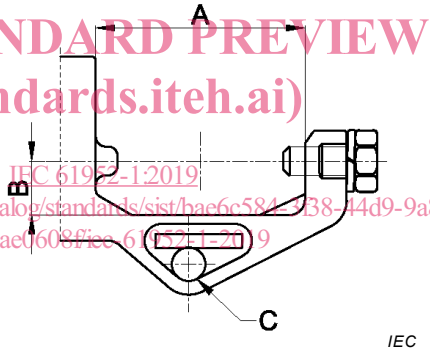

<table>
<tr><td>A</td><td>B</td><td>C</td></tr>
<tr><td>100 – 103</td><td>25,4 min</td><td>∅ 17,5 – 21</td></tr>
</table>
NOTE Details of gauges for the K fitting are given in IEC 60720.
</td><td>X</td><td></td></tr>
</table>

<table>
<tr><th rowspan="2">DESIGNATION</th><th rowspan="2">TYPE OF COUPLING</th><th rowspan="2">Examples
(non preferred values in brackets)</th><th colspan="2">Usual practice</th></tr>
<tr><th>Line End</th><th>Base end</th></tr>
<tr><td>L</td><td>Tongue (or blade)</td><td>
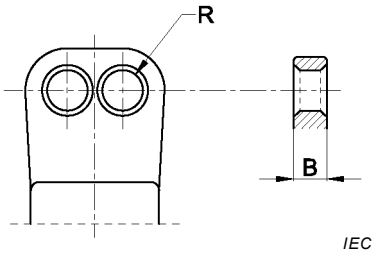

<table>
<tr><th>R</th><th>B</th></tr>
<tr><td>25,4</td><td>16</td></tr>
<tr><td>25,4</td><td>19</td></tr>
<tr><td>25,4</td><td>25</td></tr>
</table>
NOTE Other dimensions are not given since they are variable
</td><td>X</td><td></td></tr>
<tr><td>M</td><td>MK neck</td><td>
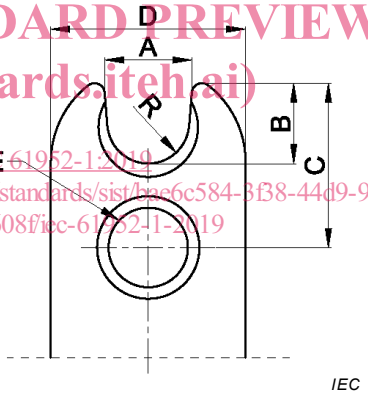

<table>
<tr><th>A</th><th>B</th><th>C</th><th>R</th><th>D</th><th>E</th></tr>
<tr><td>26</td><td>25</td><td>51</td><td>12,5</td><td>∅ 76</td><td>∅ 21</td></tr>
<tr><td>34</td><td>28</td><td>64</td><td>16</td><td>∅ 76</td><td>∅ 31</td></tr>
</table>
</td><td>X</td><td></td></tr>
</table>