IEC 62433-2

Edition 2.0 2017-01

INTERNATIONAL STANDARD

NORME INTERNATIONALE

colour inside

EMC IC modelling –
Part 2: Models of integrated circuits for EMI behavioural simulation – Conducted emissions modelling (ICEM-CE)

Modèles de circuits intégrés pour la CEM –
Partie 2: Modèles de circuits intégrés pour la simulation du comportement lors de perturbations électromagnétiques – Modélisation des émissions conduites (ICEM-CE)

IEC 62433-2:2017-01(en-fr)

IEC Central Office
3, rue de Varembé
CH-1211 Geneva 20
Switzerland

Tel.: +41 22 919 02 11
Fax: +41 22 919 03 00
info@iec.ch
www.iec.ch

About the IEC
The International Electrotechnical Commission (IEC) is the leading global organization that prepares and publishes International Standards for all electrical, electronic and related technologies.

About IEC publications
The technical content of IEC publications is kept under constant review by the IEC. Please make sure that you have the latest edition, a corrigenda or an amendment might have been published.

IEC Catalogue - webstore.iec.ch/catalogue
The stand-alone application for consulting the entire bibliographical information on IEC International Standards, Technical Specifications, Technical Reports and other documents. Available for PC, Mac OS, Android Tablets and iPad.

IEC publications search - www.iec.ch/searchpub
The advanced search enables to find IEC publications by a variety of criteria (reference number, text, technical committee,…). It also gives information on projects, replaced and withdrawn publications.

IEC Just Published - webstore.iec.ch/justpublished
Stay up to date on all new IEC publications. Just Published details all new publications released. Available online and also once a month by email.

Electropedia - www.electropedia.org
The world's leading online dictionary of electronic and electrical terms containing 20 000 terms and definitions in English and French, with equivalent terms in 16 additional languages. Also known as the International Electrotechnical Vocabulary (IEV) online.

IEC Glossary - std.iec.ch/glossary
65 000 electrotechnical terminology entries in English and French extracted from the Terms and Definitions clause of IEC publications issued since 2002. Some entries have been collected from earlier publications of IEC TC 37, 77, 86 and CISPR.

IEC Customer Service Centre - webstore.iec.ch/csc
If you wish to give us your feedback on this publication or need further assistance, please contact the Customer Service Centre: csc@iec.ch.

A propos de l'IEC
La Commission Electrotechnique Internationale (IEC) est la première organisation mondiale qui élabore et publie des Normes internationales pour tout ce qui a trait à l'électricité, à l'électronique et aux technologies apparentées.

A propos des publications IEC
Le contenu technique des publications IEC est constamment revu. Veuillez vous assurer que vous possédez l'édition la plus récente, un corrigendum ou amendement peut avoir été publié.

Catalogue IEC - webstore.iec.ch/catalogue
Application autonome pour consulter tous les renseignements bibliographiques sur les Normes internationales, Spécifications techniques, Rapports techniques et autres documents de l'IEC. Disponible pour PC, Mac OS, tablettes Android et iPad.

Recherche de publications IEC - www.iec.ch/searchpub

La recherche avancée permet de trouver des publications IEC en utilisant différents critères (numéro de référence, texte, comité d'études,…). Elle donne aussi des informations sur les projets et les publications remplacées ou retirées.

IEC Just Published - webstore.iec.ch/justpublished

Restez informé sur les nouvelles publications IEC. Just Published détaille les nouvelles publications parues. Disponible en ligne et aussi une fois par mois par email.

Electropedia - www.electropedia.org

Le premier dictionnaire en ligne de termes électroniques et électriques. Il contient 20 000 termes et définitions en anglais et en français, ainsi que les termes équivalents dans 16 langues additionnelles. Egalement appelé Vocabulaire Electrotechnique International (IEV) en ligne.

Glossaire IEC - std.iec.ch/glossary
65 000 entrées terminologiques électrotechniques, en anglais et en français, extraites des articles Termes et Définitions des publications IEC parues depuis 2002. Plus certaines entrées antérieures extraites des publications des CE 37, 77, 86 et CISPR de l'IEC.

Service Clients - webstore.iec.ch/csc

Si vous désirez nous donner des commentaires sur cette publication ou si vous avez des questions contactez-nous: csc@iec.ch.

IEC 62433-2

Edition 2.0 2017-01

INTERNATIONAL STANDARD

NORME INTERNATIONALE

colour inside

EMC IC modelling –
Part 2: Models of integrated circuits for EMI behavioural simulation – Conducted emissions modelling (ICEM-CE)

Modèles de circuits intégrés pour la CEM –
Partie 2: Modèles de circuits intégrés pour la simulation du comportement lors de perturbations électromagnétiques – Modélisation des émissions conduites (ICEM-CE)

INTERNATIONAL
ELECTROTECHNICAL
COMMISSION

COMMISSION
ELECTROTECHNIQUE
INTERNATIONALE

31.200; 33.100.10

ISBN 978-2-8322-3876-9

Warning! Make sure that you obtained this publication from an authorized distributor.
Attention! Veuillez vous assurer que vous avez obtenu cette publication via un distributeur agréé.

CONTENTS

INTERNATIONAL ELECTROTECHNICAL COMMISSION

EMC IC MODELLING –

Part 2: Models of integrated circuits for EMI behavioural simulation – Conducted emissions modelling (ICEM-CE)

FOREWORD

1) The International Electrotechnical Commission (IEC) is a worldwide organization for standardization comprising all national electrotechnical committees (IEC National Committees). The object of IEC is to promote international co-operation on all questions concerning standardization in the electrical and electronic fields. To this end and in addition to other activities, IEC publishes International Standards, Technical Specifications, Technical Reports, Publicly Available Specifications (PAS) and Guides (hereafter referred to as "IEC Publication(s)"). Their preparation is entrusted to technical committees; any IEC National Committee interested in the subject dealt with may participate in this preparatory work. International, governmental and non-governmental organizations liaising with the IEC also participate in this preparation. IEC collaborates closely with the International Organization for Standardization (ISO) in accordance with conditions determined by agreement between the two organizations.

2) The formal decisions or agreements of IEC on technical matters express, as nearly as possible, an international consensus of opinion on the relevant subjects since each technical committee has representation from all interested IEC National Committees.

3) IEC Publications have the form of recommendations for international use and are accepted by IEC National Committees in that sense. While all reasonable efforts are made to ensure that the technical content of IEC Publications is accurate, IEC cannot be held responsible for the way in which they are used or for any misinterpretation by any end user.

4) In order to promote international uniformity, IEC National Committees undertake to apply IEC Publications transparently to the maximum extent possible in their national and regional publications. Any divergence between any IEC Publication and the corresponding national or regional publication shall be clearly indicated in the latter.

5) IEC itself does not provide any attestation of conformity. Independent certification bodies provide conformity assessment services and, in some areas, access to IEC marks of conformity. IEC is not responsible for any services carried out by independent certification bodies.

6) All users should ensure that they have the latest edition of this publication.

7) No liability shall attach to IEC or its directors, employees, servants or agents including individual experts and members of its technical committees and IEC National Committees for any personal injury, property damage or other damage of any nature whatsoever, whether direct or indirect, or for costs (including legal fees) and expenses arising out of the publication, use of, or reliance upon, this IEC Publication or any other IEC Publications.

8) Attention is drawn to the Normative references cited in this publication. Use of the referenced publications is indispensable for the correct application of this publication.

9) Attention is drawn to the possibility that some of the elements of this IEC Publication may be the subject of patent rights. IEC shall not be held responsible for identifying any or all such patent rights.

International Standard IEC 62433-2 has been prepared by subcommittee 47A: Integrated Circuits, of IEC technical committee 47: Semiconductor devices.

This second edition cancels and replaces the first edition published in 2008. This edition constitutes a technical revision.

This edition includes the following significant technical changes with respect to the previous edition:

Incorporation of an XML based exchange format for model representation.

The text of this standard is based on the following documents:

FDIS	Report on voting
47A/999/FDIS	47A/1007/RVD

Full information on the voting for the approval of this standard can be found in the report on voting indicated in the above table.

This publication has been drafted in accordance with the ISO/IEC Directives, Part 2.

A list of all parts in the IEC 62433 series, published under the general title *EMC IC modelling*, can be found on the IEC website.

The committee has decided that the contents of this publication will remain unchanged until the stability date indicated on the IEC website under "http://webstore.iec.ch" in the data related to the specific publication. At this date, the publication will be

- reconfirmed,
- withdrawn,
- replaced by a revised edition, or
- amended.

IMPORTANT – The 'colour inside' logo on the cover page of this publication indicates that it contains colours which are considered to be useful for the correct understanding of its contents. Users should therefore print this document using a colour printer.

EMC IC MODELLING –

Part 2: Models of integrated circuits for EMI behavioural simulation – Conducted emissions modelling (ICEM-CE)

1 Scope

This part of IEC 62433 specifies macro-models for an Integrated Circuit (IC) to simulate conducted electromagnetic emissions on a printed circuit board. The model is commonly called Integrated Circuit Emission Model – Conducted Emission (ICEM-CE).

The ICEM-CE macro-model can also be used for modelling an IC-die, a functional block and an Intellectual Property (IP) block.

The ICEM-CE macro-model can be used to model both digital and analogue ICs.

Basically, conducted emissions have two origins:

- conducted emissions through power supply terminals and ground reference structures;
- conducted emissions through input/output (I/O) terminals.

The ICEM-CE macro-model addresses those two types of origins in a single approach.

This standard defines structures and components of the macro-model for EMI simulation taking into account the IC's internal activities.

This part of IEC 62433 has two main parts:

- the first is the electrical description of ICEM-CE macro-model elements along with the specific requirements for information.
- the second part proposes a universal data exchange format called CEML based on XML. This format allows encoding the ICEM-CE in a more useable and generic form for simulating the conducted emissions.

2 Normative references

The following documents are referred to in the text in such a way that some or all of their content constitutes requirements of this document. For dated references, only the edition cited applies. For undated references, the latest edition of the referenced document (including any amendments) applies.

IEC TS 62433-1:2011, *EMC IC modelling – Part 1: General modelling framework*

CISPR 17, *Methods of measurement of the suppression characteristics of passive EMC filtering devices*

3 Terms, definitions, abbreviations and conventions

3.1 Terms and definitions

For the purposes of this document, the following terms and definitions apply.

3.1.1
external terminal
terminal of an integrated circuit (IC) macro-model which interfaces the model to the external environment of the IC

EXAMPLE Power supply pins and input/output pins.

Note 1 to entry: In this part of IEC 62433, the name of each external terminal starts with "ET".

3.1.2
internal terminal
terminal of an integrated circuit (IC) macro-model's component which interfaces the component to other components of the IC macro-model

Note 1 to entry: In this part of IEC 62433, the name of each internal terminal starts with "IT".

3.1.3
section
XML element placed one level below the root element or within another section and that contains one or more XML elements, but no value

3.1.4
parent
keyword which is one level above another keyword

3.1.5
child
keyword which is one level below another keyword

3.1.6
parser
tool for syntactic analysis of data that is encoded in a specified format

3.1.7
***S*-parameter**
scattering parameter
S_{ij}
element of the S-matrix expressing the transmission and reflection coefficients of a device

Note 1 to entry: The most commonly used, each S-parameter relates the complex electric field strength of a reflected or transmitted wave to that of an incident wave; the subscripts of a typical S-parameter S_{ij} refer to the output and input ports related by the S-parameter, which may vary with frequency.

[SOURCE: CISPR 17:2011, 3.1.13]

3.1.8
CEML
Conducted Emissions Markup Language
data exchange format for ICEM-CE macro-model

Note 1 to entry: This note applies to the French language only.

3.1.9
CEMLBase
Conducted Emissions Markup Language Base
abstract type from which all CEML model components are directly or indirectly derived in the ICEM-CE macro-model definition

3.1.10
PDN
Passive Distribution Network
component of an IC model that represents the characteristics of propagation path of electromagnetic noises such as power distribution network

[SOURCE: IEC TS 62433-1:2011, 3.4]

3.1.11
IA
Internal Activity
component of an IC model represented by a current or voltage source, which originates in activity of active devices in an IC or in a portion of the IC

[SOURCE: IEC TS 62433-1:2011, 3.3]

3.1.12
IBC
Inter-Block Coupling
network of passive elements that presents a coupling effect between circuit blocks within an IC

[SOURCE: IEC TS 62433-1:2011, 3.5]

3.1.13
VNA
Vector Network Analyzer
network analyzer capable of measuring complex values of the S-parameters

[SOURCE: CISPR 16-1-4:2010, 3.1.21, modified — for VNA with two or more ports]

3.2 Abbreviations

CEM	Conducted Emission Model
XML	eXtensible Markup Language
SPICE	Simulation Program with Integrated Circuit Emphasis

3.3 Conventions

For the sake of clarity, but with some exceptions, the writing conventions of XML have been used in text and tables.

The symbol “μ” is used in the text part to define micro = 1e-6. The symbol “u” is used in the XML parts to define the micro = 1e-6.

4 Philosophy

4.1 General

Integrated circuits will have more and more gates on silicon and technical progress will develop faster. To predict the electromagnetic behaviour of equipment, it is required to model the switching of the input and output interface and the internal activities of an IC effectively.

Figure 1 depicts an example of decomposition of an IC to enable conducted emissions analysis. The internal digital activity (culprit) is a source of electromagnetic noise that originates in switching of active devices. The coupling path propagates the emissions to the

IC's external terminals: pins/pads. The coupling path is the power distribution network or I/O lines inside the IC.

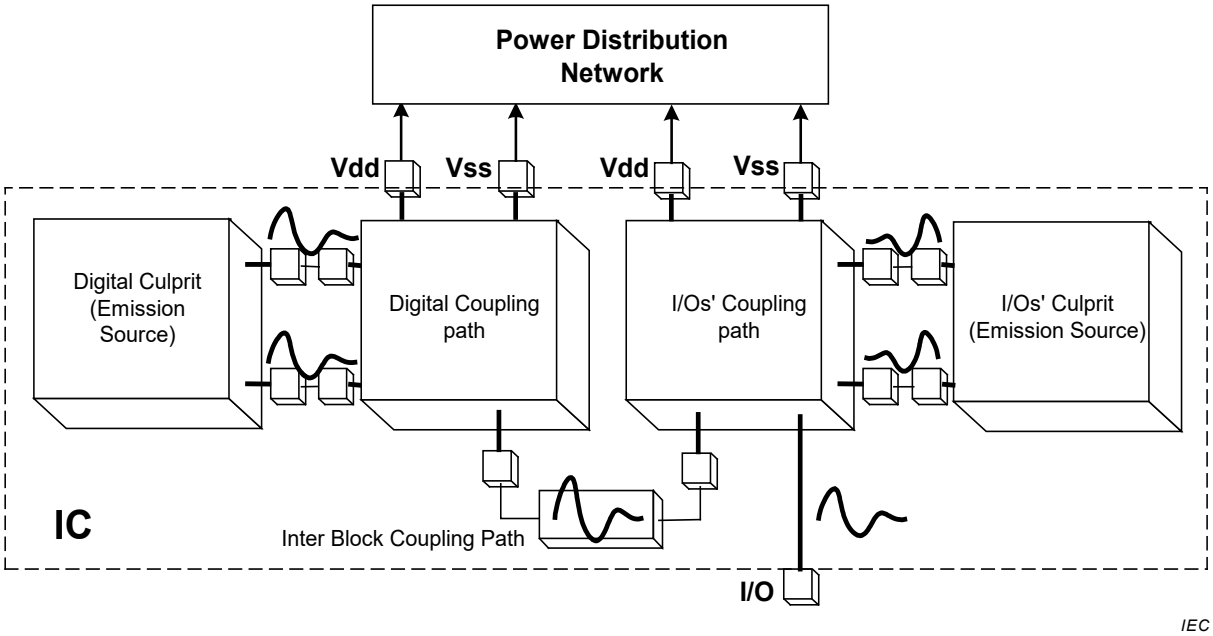

Figure 1 – Decomposition example of a digital IC for conducted emissions analysis

4.2 Conducted emission from core activity (digital culprit)

The current transients are created in the core area on the IC-die. Due to the characteristics of the digital coupling paths, the passive distribution network on printed circuit board (PCB) and the availability of on-chip decoupling, a portion of these current transients will occur at the power supply pins of the IC.

NOTE These off-chip power supply currents can be measured according to the IEC 61967 series [1][1].

4.3 Conducted emission from I/O activity

I/Os activities may create voltage fluctuations of power and ground levels, and conducted emissions appear at power and ground pins through the I/Os' coupling path. And the output signals at output pins themselves are sources of conducted emissions to the printed circuit boards.

NOTE The measurement set-up is done according to the IEC 61967 series [1].

4.4 Data exchange format

ICEM-CE macro-model data is arranged in a decipherable nested manner using XML format. The objective of this exchange format, called Conducted Emissions Markup Language (CEML), is to create simple and practical universal access to ICEM-CE macro-model. The preliminary definitions for XML representation is given in Annex A. The CEML keywords and their usage rules are detailed in Annex B. An example ICEM-CE macro-model, in CEML format, is given in Annex C.

1 Numbers in square brackets refer to the Bibliography.

5 ICEM-CE basic components

5.1 General

The basic components are component parts of the IC macro-model or block component or sub-model component. The basic components of the ICEM-CE macro-model are defined in 5.2 and 5.3.

NOTE The block component and the sub-model component are defined in 6.3.1 and 6.4.1 respectively.

5.2 Internal Activity (IA)

5.2.1 General

The Internal Activity (IA) component is the electromagnetic noise source that originates in switching of active devices in the IC or in a portion of the IC. This component is applicable for both analogue and digital circuitry.

The IA is described using an independent current source or an independent voltage source with two internal terminals. Figure 2 illustrates an example of an independent current source.

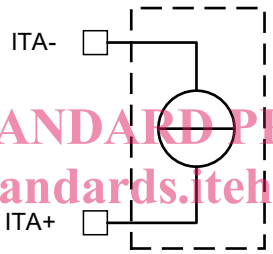

Figure 2 – IA component in the case of a current source

The characteristics of IA component are typically described in the time domain, and the characteristics can also be described in the frequency domain.

The description of an IA component shall contain the following information.

- Name of the IA component
- Names of its internal terminals
- Operational mode or test vector
- Domain (time or frequency)
- Definition of origin of time, and cycle-time for the operational mode (for time domain)
- Definition of origin of phase (for frequency domain)
- Operational conditions and applicable ranges
  - a) Power supply voltage ranges
  - b) Temperature range
  - c) Frequency range
- Characteristics of the IA
  - a) Current or voltage waveform over the whole cycle-time (for time domain)
  - b) Current or voltage amplitude and phase, versus frequency over the whole frequency range (for frequency domain)