SLOVENSKI STANDARD
SIST EN 3907:2005

01-junij-2005

Nadomeġ̣a:

SIST EN 3907:2004

Aerospace series - Bolts, double hexagon head, normal shank, long thread, in titanium alloy TI-P64001, MoS2 coated - Classification: 1 100 MPa (at ambient temperature) / 350 °C

Aerospace series - Bolts, double hexagon head, normal shank, long thread, in titanium alloy TI-P64001, MoS2 coated - Classification: 1 100 MPa (at ambient temperature) / 350 °C

Luft- und Raumfahrt - Zwölfkantschrauben, langes Gewinde, aus Titanlegierung TI-P64001, MoS2 beschichtet - Klasse: 1 100 MPa (bei Raumtemperatur) / 350 °C

Série aérospatiale - Vis a tete bihexagonale, fut normal, filetage long, en alliage de titane TI-P64001, revetues MoS2 - Classification : 1 100 MPa (a température ambiante) / 350 ° C

Ta slovenski standard je istoveten z: EN 3907:2004

ICS:

49.030.20 Sorniki, vijaki, stebelni vijaki Bolts, screws, studs

SIST EN 3907:2005 en

EUROPEAN STANDARD

NORME EUROPÉENNE

EUROPÄISCHE NORM

EN 3907

November 2004

ICS 49.030.20

Supersedes EN 3907:2003

English version

Aerospace series - Bolts, double hexagon head, normal shank, long thread, in titanium alloy TI-P64001, MoS2 coated - Classification: 1 100 MPa (at ambient temperature) / 350° C

Série aérospatiale - Vis à tête bihexagonale, fût normal, filetage long, en alliage de titane TI-P64001, revêtues MoS2 - Classification : 1 100 MPa (à température ambiante) / 350° C

Luft- und Raumfahrt - Zwölfkantschrauben, langes Gewinde, aus Titanlegierung TI-P64001, MoS2-beschichtet - Klasse: 1 100 MPa (bei Raumtemperatur) / 350° C

This European Standard was approved by CEN on 11 September 2003.

CEN members are bound to comply with the CEN/CENELEC Internal Regulations which stipulate the conditions for giving this European Standard the status of a national standard without any alteration. Up-to-date lists and bibliographical references concerning such national standards may be obtained on application to the Central Secretariat or to any CEN member.

This European Standard exists in three official versions (English, French, German). A version in any other language made by translation under the responsibility of a CEN member into its own language and notified to the Central Secretariat has the same status as the official versions.

CEN members are the national standards bodies of Austria, Belgium, Cyprus, Czech Republic, Denmark, Estonia, Finland, France, Germany, Greece, Hungary, Iceland, Ireland, Italy, Latvia, Lithuania, Luxembourg, Malta, Netherlands, Norway, Poland, Portugal, Slovakia, Slovenia, Spain, Sweden, Switzerland and United Kingdom.

EUROPEAN COMMITTEE FOR STANDARDIZATION
COMITÉ EUROPÉEN DE NORMALISATION
EUROPÄISCHES KOMITEE FÜR NORMUNG

Management Centre: rue de Stassart, 36 B-1050 Brussels

Ref. No. EN 3907:2004: E

Contents

Page

Foreword

This document (EN 3907:2004) has been prepared by the European Association of Aerospace Manufacturers - Standardization (AECMA-STAN).

After enquiries and votes carried out in accordance with the rules of this Association, this Standard has received the approval of the National Associations and the Official Services of the member countries of AECMA, prior to its presentation to CEN.

This European Standard shall be given the status of a national standard, either by publication of an identical text or by endorsement, at the latest by May 2005, and conflicting national standards shall be withdrawn at the latest by May 2005.

This document supersedes EN 3907:2003.

According to the CEN/CENELEC Internal Regulations, the national standards organizations of the following countries are bound to implement this European Standard: Austria, Belgium, Cyprus, Czech Republic, Denmark, Estonia, Finland, France, Germany, Greece, Hungary, Iceland, Ireland, Italy, Latvia, Lithuania, Luxembourg, Malta, Netherlands, Norway, Poland, Portugal, Slovakia, Slovenia, Spain, Sweden, Switzerland and United Kingdom.

1 Scope

This standard specifies the characteristics of double hexagon headed bolts, with normal shank and long thread, in TI-P64001, MoS_2 coated, for aerospace applications.

Classification: 1 100 MPa [1] / 350 °C [2]

2 Normative references

The following referenced documents are indispensable for the application of this document. For dated references, only the edition cited applies. For undated references, the latest edition of the referenced document (including any amendments) applies.

ISO 3353-1, *Aerospace – Lead and runout threads – Part 1: Rolled external threads*

ISO 4095, *Aerospace – Bihexagonal drives – Wrenching configuration – Metric series*

ISO 5855-2, *Aerospace – MJ threads – Part 2: Limit dimensions for bolts and nuts*

EN 2424, *Aerospace series – Marking of aerospace products*

EN 2491, *Aerospace series – Molybdenum disulphide dry lubricants – Coating methods*

EN 3813, *Aerospace series – Titanium alloy TI-P64001 – Annealed – Bar and wire for forged fasteners – $D_e \leq 25$ mm* [3]

EN 3818, *Aerospace series – Bolts, MJ threads, in titanium alloy TI-P64001 – Strength class: 1 100 MPa (at ambient temperature) – Technical specification*

3 Required characteristics

3.1 Configuration – Dimensions – Tolerances – Masses

See Figure 1 and Tables 1 and 2.

Dimensions and tolerances are in millimetres. They apply before MoS_2 coating.

3.2 Material

EN 3813

3.3 Surface treatment

EN 2491

---

1) Minimum tensile strength of the material at ambient temperature
2) Maximum test temperature of the parts
3) Published as AECMA Prestandard at the date of publication of this standard

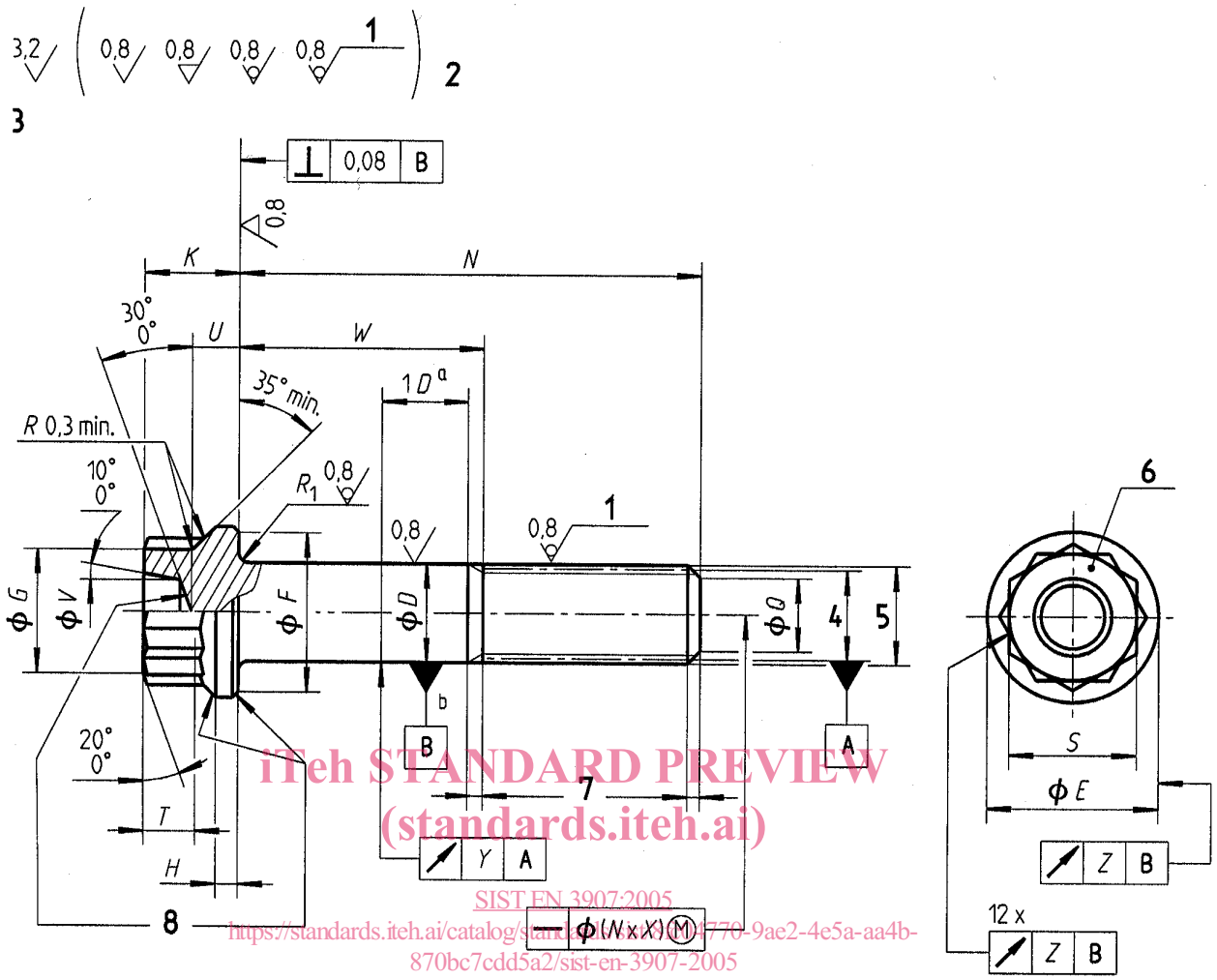

Key

1 rolled
2 values apply before MoS_2 coating.
3 remove sharp edges 0,1 to 0,4.
4 pitch diameter
5 thread
6 marking
7 conforms to ISO 3353-1.
8 shape in this area at manufacturer's option

[a] When the length of the shank is less than one times the nominal value of the shank diameter *D*, the run-out is measured at a distance equal to half the actual shank length.

[b] For bolts having a shank length less than one times the nominal value of the shank diameter *D*, and for those threaded to head, the pitch diameter axis shall be used as the datum.

Figure 1

Table 1

Thread [a]		*D*	*E*	*F*	*G*	*H*	*K*	*Q*	R_1		*S* [b]	*T*	*U*		*V*		*X*	*Y*	*Z*
Code	Designation	h12	max.	min.	min.	min.	h15	± 0,5	max.	min.		min.	max.	min.	max.	min.			
050	MJ5×0,8-4h6h	5	9,1	8,3	6,8	1	5,5	3,4	0,5	0,3	7	2	2,9	2,5	3,7	3,2	0,003	0,12	0,13
060	MJ6×1-4h6h	6	10,6	9,8	7,8	1,2	6	4,2	0,7	0,5	8	2,3	3,2	2,8	4,6	4,1			0,15
070	MJ7×1-4h6h	7	12,1	11,3	8,8	1,4	6,5	5,2			9	2,6	3,7	3,3	5,4	4,9		0,15	0,18
080	MJ8×1-4h6h	8	13,6	12,8	9,8	1,6	7	6,2			10	2,8	4,1	3,7	5,7	5,2			0,2
100	MJ10×1,25-4h6h	10	16,7	15,7	11,8	2	8	7,9	0,8	0,6	12	3,1	5,1	4,7	7,2	6,7	0,0025		0,25
120	MJ12×1,25-4h6h	12	19,9	18,8	13,7	2,4	9,2	9,8	0,9		14	3,5	6	5,6	8,5	8		0,18	0,3

[a] In accordance with ISO 5855-2.
[b] Bihexagonal wrenching configuration in conformity with ISO 4095 over length *T* min.

Table 2

Length code	*N*	Thread code																	
		050			060			070			080			100			120		
		W		Mass [a]	*W*		Mass [a]	*W*		Mass [a]	*W*		Mass [a]	*W*		Mass [a]	*W*		Mass [a]
	± 0,3	max.	min.		max.	min.		max.	min.		max.	min.		max.	min.		max.	min.	
008	8			1,78	–	–	–	–	–	–	–	–	–	–	–	–	–	–	–
010	10			1,96			2,71			3,65			4,76	–	–	–	–	–	–
012	12	2,1	01,7	2,13			2,97			4,00			5,21	–	–	–	–	–	–
014	14			2,30	2,7	2,2	3,22			4,34			5,66			9,02	–	–	–
016	16			2,48			3,47	2,7	2,2	4,68	2,7	2,2	6,10			9,71			14,37
018	18			2,65			3,72			5,02			6,55			10,41			15,38
020	20	4	2,5	2,83			3,97			5,37			7,00	3,3	2,7	11,11			16,39
022	22	6	4,5	3,00	4	2,5	4,22			5,71			7,45			11,81			17,39
024	24	8	6,5	3,18	6	4,5	4,48	4	2,5	6,05			7,89			12,51	3,4	2,8	18,40
026	26	10	08,5	3,35	8	6,5	4,73	6	4,5	6,39	4	2,5	8,34			13,21			19,41
028	28	12	10,5	3,53	10	8,5	4,98	8	6,5	6,74	6	4,5	8,79			13,91			20,41
030	30	14	12,5	3,70	12	10,5	5,23	10	8,5	7,08	8	6,5	9,23	4	2,7	14,61			21,42
032	32	16	14,5	3,88	14	12,5	5,48	12	10,5	7,42	10	8,5	9,68	6	4,5	15,31			22,42
034	34	18	16,5	4,05	16	14,5	5,73	14	12,5	7,76	12	10,5	10,13	8	6,5	16,01	4	2,8	23,43
036	36	20	18,5	4,23	18	16,5	5,99	16	14,5	8,11	14	12,5	10,58	10	8,5	16,70	6	4,5	24,44
038	38	22	20,5	4,40	20	18,5	6,24	18	16,5	8,45	16	14,5	11,02	12	10,5	17,40	8	6,5	25,44
040	40	24	22,5	4,58	22	20,5	6,49	20	18,5	8,79	18	16,5	11,47	14	12,5	18,10	10	8,5	26,45
042	42	26	24,5	4,75	24	22,5	6,74	22	20,5	9,13	20	18,5	11,92	16	14,5	18,80	12	10,5	27,46
044	44	28	26,5	4,93	26	24,5	6,99	24	22,5	9,47	22	20,5	12,37	18	16,5	19,50	14	12,5	28,46
046	46	30	28,5	5,10	28	26,5	7,24	26	24,5	9,82	24	22,5	12,81	20	18,5	20,20	16	14,5	29,47
048	48	32	30,5	5,27	30	28,5	7,50	28	26,5	10,16	26	24,5	13,26	22	20,5	20,90	18	16,5	30,48
050	50	34	32,5	5,45	32	30,5	7,75	30	28,5	10,50	28	26,5	13,71	24	22,5	21,60	20	18,5	31,48
052	52	36	34,5	5,62	34	32,5	8,00	32	30,5	10,84	30	28,5	14,16	26	24,5	22,30	22	20,5	32,49
054	54	38	36,5	5,80	36	34,5	8,25	34	32,5	11,19	32	30,5	14,60	28	26,5	23,00	24	22,5	33,50
056	56	40	38,5	5,97	38	36,5	8,50	36	34,5	11,53	34	32,5	15,05	30	28,5	23,69	26	24,5	34,50
058	58	42	40,5	6,15	40	38,5	8,75	38	36,5	11,87	36	34,5	15,50	32	30,5	24,39	28	26,5	35,51
060	60	44	42,5	6,32	42	40,5	9,01	40	38,5	12,21	38	36,5	15,95	34	32,5	25,09	30	28,5	36,52
062	62	46	44,5	6,50	44	42,5	9,26	42	40,5	12,56	40	38,5	16,39	36	34,5	25,79	32	30,5	37,52
064	64	48	46,5	6,67	46	44,5	9,51	44	42,5	12,90	42	40,5	16,84	38	36,5	26,49	34	32,5	38,53
066	66	50	48,5	6,85	48	46,5	9,76	46	44,5	13,24	44	42,5	17,29	40	38,5	27,19	36	34,5	39,54
068	68	52	50,5	7,02	50	48,5	10,01	48	46,5	13,58	46	44,5	17,74	42	40,5	27,89	38	36,5	40,54

continued

Table 2 *(concluded)*

Length code	*N*	Thread code 050			060			070			080			100			120		
		W		Mass [a]	*W*		Mass [a]	*W*		Mass [a]	*W*		Mass [a]	*W*		Mass [a]	*W*		Mass [a]
	± 0,3	max.	min.		max.	min.		max.	min.		max.	min.		max.	min.		max.	min.	
070	70	54	52,5	7,20	52	50,5	10,26	50	48,5	16,93	48	46,5	18,18	44	42,5	28,59	40	38,5	41,55
072	72	–	–	–	54	52,5	10,51	52	50,5	14,27	50	48,5	18,63	46	29,29	49,57	42	40,5	42,55
074	74	–	–	–	56	54,5	10,77	54	52,5	14,61	52	50,5	19,08	48	29,99	50,66	44	42,5	43,56
076	76	–	–	–	58	56,5	11,02	56	54,5	14,95	54	52,5	19,53	50	30,68	51,75	46	44,5	44,57
078	78	–	–	–	60	58,5	11,27	58	56,5	15,30	56	54,5	19,97	52	31,38	52,84	48	46,5	45,57
080	80	–	–	–	62	60,5	11,52	60	58,5	15,64	58	56,5	20,42	54	32,08	53,93	50	48,5	46,58
082	82	–	–	–	64	62,5	11,77	62	60,5	15,98	60	58,5	20,87	56	32,78	55,01	52	50,5	47,59
084	84	–	–	–	66	64,5	12,02	64	62,5	16,32	62	60,5	21,31	58	33,48	56,10	54	52,5	48,59
086	86	–	–	–	–	–	–	66	64,5	16,67	64	62,5	21,76	60	34,18	57,19	56	54,5	49,60
088	88	–	–	–	–	–	–	68	66,5	17,01	66	64,5	22,21	62	34,88	58,28	58	56,5	50,61
090	90	–	–	–	–	–	–	70	68,5	17,35	68	66,5	22,66	64	35,58	59,37	60	58,5	51,61
092	92	–	–	–	–	–	–	72	70,5	17,69	70	68,5	23,10	66	36,28	60,46	62	60,5	52,62
094	94	–	–	–	–	–	–	74	72,5	18,04	72	70,5	23,55	68	36,98	61,54	64	62,5	53,63
096	96	–	–	–	–	–	–	76	74,5	18,38	74	72,5	24,00	70	37,67	62,63	66	64,5	54,63
098	98	–	–	–	–	–	–	78	76,5	18,72	76	74,5	24,45	72	38,37	63,72	68	66,5	55,64
100	100	–	–	–	–	–	–	–	–	–	78	76,5	24,89	74	39,07	64,81	70	68,5	56,65
104	104	–	–	–	–	–	–	–	–	–	82	80,5	25,79	78	40,47	66,99	74	72,5	58,66
108	108	–	–	–	–	–	–	–	–	–	86	84,5	26,68	82	41,87	69,16	78	76,5	60,67
112	112	–	–	–	–	–	–	–	–	–	90	88,5	27,58	86	43,27	71,34	82	80,5	62,68
116	116	–	–	–	–	–	–	–	–	–	–	–	–	90	44,66	73,51	86	84,5	64,70
120	120	–	–	–	–	–	–	–	–	–	–	–	–	94	46,06	75,69	90	88,5	66,71
124	124	–	–	–	–	–	–	–	–	–	–	–	–	98	47,46	77,87	94	92,5	68,72
128	128	–	–	–	–	–	–	–	–	–	–	–	–	102	48,86	80,04	98	96,5	70,74
132	132	–	–	–	–	–	–	–	–	–	–	–	–	106	50,26	82,22	102	100,5	72,75
136	136	–	–	–	–	–	–	–	–	–	–	–	–	110	51,65	84,40	106	104,5	74,76
140	140	–	–	–	–	–	–	–	–	–	–	–	–	114	53,05	86,57	110	108,5	76,78
144	144	–	–	–	–	–	–	–	–	–	–	–	–	–	–	–	114	112,5	78,79
148	148	–	–	–	–	–	–	–	–	–	–	–	–	–	–	–	118	116,5	80,80
152	152	–	–	–	–	–	–	–	–	–	–	–	–	–	–	–	122	120,5	82,81
156	156	–	–	–	–	–	–	–	–	–	–	–	–	–	–	–	126	124,5	84,83
160	160	–	–	–	–	–	–	–	–	–	–	–	–	–	–	–	130	128,5	86,84
164	164	–	–	–	–	–	–	–	–	–	–	–	–	–	–	–	134	132,5	88,85
168	168	–	–	–	–	–	–	–	–	–	–	–	–	–	–	–	138	136,5	90,87

[a] Mass ≈ quoted in kg/1 000 parts