IEC 60205

Edition 4.0 2016-11

INTERNATIONAL STANDARD

NORME INTERNATIONALE

Calculation of the effective parameters of magnetic piece parts

Calcul des paramètres effectifs des pièces magnétiques

IEC 60205:2016-11(en-fr)

IEC Central Office
3, rue de Varembé
CH-1211 Geneva 20
Switzerland

Tel.: +41 22 919 02 11
info@iec.ch
www.iec.ch

About the IEC
The International Electrotechnical Commission (IEC) is the leading global organization that prepares and publishes International Standards for all electrical, electronic and related technologies.

About IEC publications
The technical content of IEC publications is kept under constant review by the IEC. Please make sure that you have the latest edition, a corrigendum or an amendment might have been published.

IEC publications search - webstore.iec.ch/advsearchform
The advanced search enables to find IEC publications by a variety of criteria (reference number, text, technical committee, …). It also gives information on projects, replaced and withdrawn publications.

IEC Just Published - webstore.iec.ch/justpublished
Stay up to date on all new IEC publications. Just Published details all new publications released. Available online and once a month by email.

IEC Customer Service Centre - webstore.iec.ch/csc
If you wish to give us your feedback on this publication or need further assistance, please contact the Customer Service Centre: sales@iec.ch.

IEC online collection - oc.iec.ch
Discover our powerful search engine and read freely all the publications previews. With a subscription you will always have access to up to date content tailored to your needs.

Electropedia - www.electropedia.org
The world's leading online dictionary on electrotechnology, containing more than 22 000 terminological entries in English and French, with equivalent terms in 18 additional languages. Also known as the International Electrotechnical Vocabulary (IEV) online.

A propos de l'IEC
La Commission Electrotechnique Internationale (IEC) est la première organisation mondiale qui élabore et publie des Normes internationales pour tout ce qui a trait à l'électricité, à l'électronique et aux technologies apparentées.

A propos des publications IEC
Le contenu technique des publications IEC est constamment revu. Veuillez vous assurer que vous possédez l'édition la plus récente, un corrigendum ou amendement peut avoir été publié.

Recherche de publications IEC - webstore.iec.ch/advsearchform
La recherche avancée permet de trouver des publications IEC en utilisant différents critères (numéro de référence, texte, comité d'études, …). Elle donne aussi des informations sur les projets et les publications remplacées ou retirées.

IEC Just Published - webstore.iec.ch/justpublished
Restez informé sur les nouvelles publications IEC. Just Published détaille les nouvelles publications parues. Disponible en ligne et une fois par mois par email.

Service Clients - webstore.iec.ch/csc
Si vous désirez nous donner des commentaires sur cette publication ou si vous avez des questions contactez-nous: sales@iec.ch.

IEC online collection - oc.iec.ch
Découvrez notre puissant moteur de recherche et consultez gratuitement tous les aperçus des publications. Avec un abonnement, vous aurez toujours accès à un contenu à jour adapté à vos besoins.

Electropedia - www.electropedia.org
Le premier dictionnaire d'électrotechnologie en ligne au monde, avec plus de 22 000 articles terminologiques en anglais et en français, ainsi que les termes équivalents dans 16 langues additionnelles. Egalement appelé Vocabulaire Electrotechnique International (IEV) en ligne.

IEC 60205

Edition 4.0 2016-11

INTERNATIONAL STANDARD

NORME INTERNATIONALE

Calculation of the effective parameters of magnetic piece parts

Calcul des paramètres effectifs des pièces magnétiques

INTERNATIONAL
ELECTROTECHNICAL
COMMISSION

COMMISSION
ELECTROTECHNIQUE
INTERNATIONALE

ICS 29.100.10

ISBN 978-2-8322-9263-1

Warning! Make sure that you obtained this publication from an authorized distributor.
Attention! Veuillez vous assurer que vous avez obtenu cette publication via un distributeur agréé.

CONTENTS

INTERNATIONAL ELECTROTECHNICAL COMMISSION

CALCULATION OF THE EFFECTIVE PARAMETERS OF MAGNETIC PIECE PARTS

FOREWORD

1) The International Electrotechnical Commission (IEC) is a worldwide organization for standardization comprising all national electrotechnical committees (IEC National Committees). The object of IEC is to promote international co-operation on all questions concerning standardization in the electrical and electronic fields. To this end and in addition to other activities, IEC publishes International Standards, Technical Specifications, Technical Reports, Publicly Available Specifications (PAS) and Guides (hereafter referred to as "IEC Publication(s)"). Their preparation is entrusted to technical committees; any IEC National Committee interested in the subject dealt with may participate in this preparatory work. International, governmental and non-governmental organizations liaising with the IEC also participate in this preparation. IEC collaborates closely with the International Organization for Standardization (ISO) in accordance with conditions determined by agreement between the two organizations.

2) The formal decisions or agreements of IEC on technical matters express, as nearly as possible, an international consensus of opinion on the relevant subjects since each technical committee has representation from all interested IEC National Committees.

3) IEC Publications have the form of recommendations for international use and are accepted by IEC National Committees in that sense. While all reasonable efforts are made to ensure that the technical content of IEC Publications is accurate, IEC cannot be held responsible for the way in which they are used or for any misinterpretation by any end user.

4) In order to promote international uniformity, IEC National Committees undertake to apply IEC Publications transparently to the maximum extent possible in their national and regional publications. Any divergence between any IEC Publication and the corresponding national or regional publication shall be clearly indicated in the latter.

5) IEC itself does not provide any attestation of conformity. Independent certification bodies provide conformity assessment services and, in some areas, access to IEC marks of conformity. IEC is not responsible for any services carried out by independent certification bodies.

6) All users should ensure that they have the latest edition of this publication.

7) No liability shall attach to IEC or its directors, employees, servants or agents including individual experts and members of its technical committees and IEC National Committees for any personal injury, property damage or other damage of any nature whatsoever, whether direct or indirect, or for costs (including legal fees) and expenses arising out of the publication, use of, or reliance upon, this IEC Publication or any other IEC Publications.

8) Attention is drawn to the Normative references cited in this publication. Use of the referenced publications is indispensable for the correct application of this publication.

9) Attention is drawn to the possibility that some of the elements of this IEC Publication may be the subject of patent rights. IEC shall not be held responsible for identifying any or all such patent rights.

International Standard IEC 60205 has been prepared by IEC technical committee 51: Magnetic components, ferrite and and magnetic powder materials.

This fourth edition cancels and replaces the third edition published in 2006 and Amendment 1:2009. This edition constitutes a technical revision.

This edition includes the following significant technical changes with respect to the previous edition:

a) addition, in 5.1, of the drawing of a core of rectangular cross-section with chamfer;

b) addition, in 5.1.3, of the equation of a core of rectangular cross-section with chamfer;

c) equations in 5.1.4, 5.6, 5.7, 5.8, 5.9, 5.11, 5.12, 5.14 are amended or replaced;

d) drawings RM6-S and RM6-R in 5.7 are amended;

e) addition of EC-cores, see 5.15.

The text of this standard is based on the following documents:

FDIS	Report on voting
51/1149/FDIS	51/1156/RVD

Full information on the voting for the approval of this International Standard can be found in the report on voting indicated in the above table.

This document has been drafted in accordance with the ISO/IEC Directives, Part 2.

The committee has decided that the contents of this document will remain unchanged until the stability date indicated on the IEC website under "http://webstore.iec.ch" in the data related to the specific document. At this date, the document will be

- reconfirmed,
- withdrawn,
- replaced by a revised edition, or
- amended.

The contents of the corrigendum of July 2018 have been included in this copy.

INTRODUCTION

The purpose of this revision is to provide formulae by which everybody can reach the same effective parameter values. Firstly, it is necessary to have a sufficient number of significant figures when figures are rounded off in the process of calculation. Additionally, some of the calculation formulae have been changed to get closer to the actual shape.

In this revision, the basic idea of calculation has not been changed. Recently, analysis of the magnetic field in the core has been considerably improved, so that, based on these ideas, development of new approaches and formulae can be expected.

Furthermore, the new “EC-cores” have been added.

The parameters in the existing IEC standards will be revised with the outcome from the formulae of this document.

CALCULATION OF THE EFFECTIVE PARAMETERS OF MAGNETIC PIECE PARTS

1 Scope

This document specifies uniform rules for the calculation of the effective parameters of closed circuits of ferromagnetic material.

2 Normative references

There are no normative references in this document.

3 Terms and definitions

No terms and definitions are listed in this document.

ISO and IEC maintain terminological databases for use in standardization at the following addresses:

- IEC Electropedia: available at http://www.electropedia.org/
- ISO Online browsing platform: available at http://www.iso.org/obp

4 Basic rules applicable to this standard

4.1 All results shall be expressed in units based on millimetres, shall be accurate to three significant figures, but to derive l_e, A_e and V_e the values of C_1 and C_2 shall be calculated to five significant figures. All angles are in radians.

NOTE The purpose of specifying this degree of accuracy is only to ensure that parameters calculated at different establishments are identical and it is not intended to imply that the parameters are capable of being determined to this accuracy.

4.2 A_{min} is the nominal value of the smallest cross-section. A_g is the geometrical cross-section of a ring core with rectangular shape. All the dimensions used to calculate A_{min} shall be the mean values between the tolerance limits quoted on the appropriate piece part drawing. All results shall be expressed in units based on millimetres, and shall be accurate to three significant figures.

The minimum physical cross-section area A_{min} is given as: $A_{min} = \min(A_i)$

NOTE A_g to be used for the measurement of the saturation flux density B_{max} on ring cores with rectangular cross-section.

4.3 Calculations are only applicable to the component parts of a closed magnetic circuit.

4.4 All dimensions used for the purpose of calculations shall be the mean value within the tolerance limits quoted on the appropriate piece part drawing.

4.5 All irregularities in the outline of the core, such as small cut-outs, notches, chamfers, etc. shall be ignored unless otherwise described.

4.6 When the calculation involves the sharp corner of a piece part, then the mean length of flux path for that corner shall be taken as the mean circular path joining the centres of area of the two adjacent uniform sections, and the cross-sectional area associated with that length shall be taken as the average area of the two adjacent uniform sections.

Calculation of effective parameters l_e, A_e and V_e.

The effective parameters can be defined as

$$l_e = C_1^2/C_2 \quad A_e = C_1/C_2 \quad V_e = l_e A_e = C_1^3/C_2^2$$

where

l_e is the effective magnetic length of the core (mm);

A_e is the effective cross-sectional area (mm^2);

V_e is the effective volume (mm^3);

C_1 is the core constant (mm^{-1});

C_2 is the core constant (mm^{-3}).

5 Formulae for the various types of cores

5.1 Ring cores

5.1.1 Ring cores in general

Drawings of ring cores are shown in Figure 1.

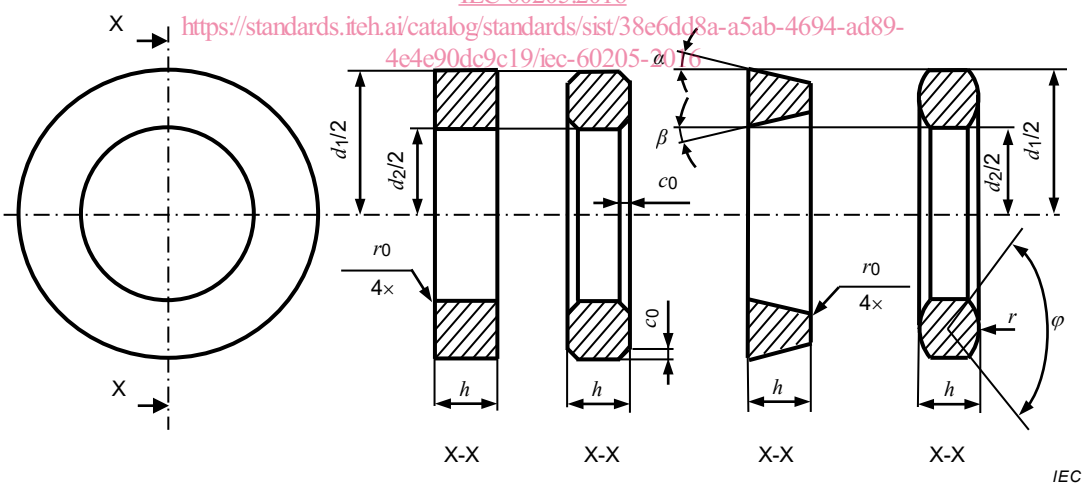

Figure 1 – Ring cores

$$C_1 = \frac{2\pi}{h_e \ln(d_1/d_2)}$$

$$C_2 = \frac{4\pi(1/d_2 - 1/d_1)}{h_e^2 \ln^3(d_1/d_2)}$$

5.1.2 For ring cores of rectangular cross-section with sharp corners

$$h_e = h$$

The geometrical cross-section of a ring core with rectangular shape A_g is given as:

$$A_g = h\frac{d_2 - d_1}{2}$$

5.1.3 For ring cores of rectangular cross-section with an appreciable average rounding radius r_0

$$h_e = h(1 - k_1) \quad k_1 = \frac{1{,}7168 r_0^{\,2}}{h(d_1 - d_2)}$$

5.1.4 For ring cores of rectangular cross-section with appreciable chamfer c_0

$$h_e = h(1 - k_3) \quad k_3 = \frac{4c_0^{\,2}}{h(d_1 - d_2)}$$

The geometrical cross-section of a ring core with appreciable chamfer shape A_g is given as:

$$A_g = h\frac{d_2 - d_1}{2} - 2c_0^{\,2}$$

5.1.5 For ring cores of trapezoidal cross-section with sharp corners

$$h_e = h(1 - k_2) \quad k_2 = \frac{h(\tan\alpha + \tan\beta)}{d_1 - d_2}$$

5.1.6 For ring cores of trapezoidal cross-section with an appreciable average rounding radius r_0

$$h_e = h(1 - k_1 - k_2)$$

5.1.7 For ring cores of cross-section with circular arc frontal sides

$$h_e = h - \frac{d_1 - d_2}{4\sin^2(\varphi/2)}\left(2\sin\frac{\varphi}{2} - \frac{\sin\varphi}{2} - \frac{\varphi}{2}\right)$$

$$\varphi = 2\arcsin\frac{d_1 - d_2}{4r} \quad .$$

When the winding is uniformly distributed over a ring core, it may be expected that, at all points inside the ring core, the flux lines will be parallel to its surface.

No leakage flux will therefore leave or enter the ring core. This justifies the use of a theoretically more correct derivation of the effective parameters, which does not make use of the assumption that the flux is uniformly distributed over the cross-section.

5.2 Pair of U-cores of rectangular section

Drawings of a pair of U-cores of the rectangular section are shown in Figure 2.

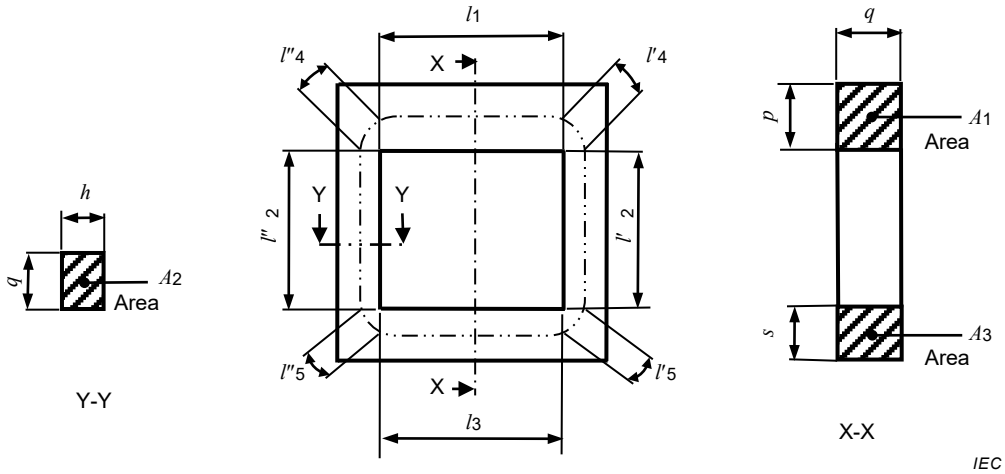

Figure 2 – Pair of U-cores of the rectangular section

Length of flux path associated with area A_2:

$$l_2 = l'_2 + l''_2$$

Mean length of flux paths at corners:

$$l_4 = l'_4 + l''_4 = \frac{\pi}{4}(p + h)$$

$$l_5 = l'_5 + l''_5 = \frac{\pi}{4}(s + h)$$

Mean areas associated with l_4 and l_5:

$$A_4 = \frac{A_1 + A_2}{2}$$

$$A_5 = \frac{A_2 + A_3}{2}$$

$$C_1 = \sum_{i=1}^{5} \frac{l_i}{A_i} \qquad C_2 = \sum_{i=1}^{5} \frac{l_i}{A_i^2}$$

5.3 Pair of U-cores of rounded section

Drawings of a pair of U-cores of the rounded section are shown in Figure 3.

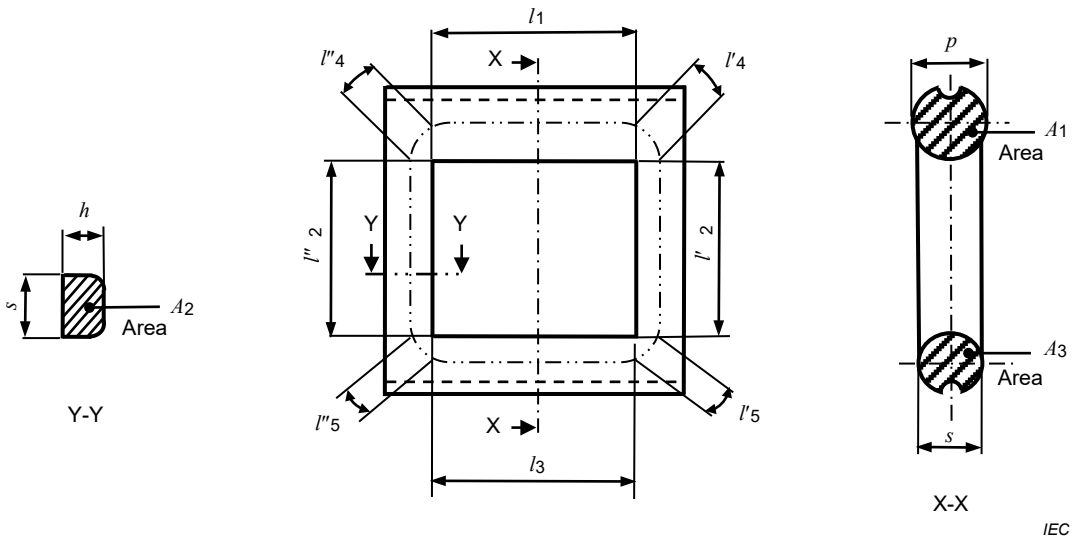

Figure 3 – Pair of U-cores of rounded section

In calculating A_2 ignore any ridges introduced for the purpose of facilitating manufacture.

Length of flux path associated with area A_2:

$$l_2 = l'_2 + l''_2$$

Mean length of flux path at corners:

$$l_4 = l'_4 + l''_4 = \frac{\pi}{4}(p + h)$$

$$l_5 = l'_5 + l''_5 = \frac{\pi}{4}(s + h)$$

Mean areas associated with l_4 and l_5:

$$A_4 = \frac{A_1 + A_2}{2}$$

$$A_5 = \frac{A_2 + A_3}{2}$$

$$C_1 = \sum_{i=1}^{5} \frac{l_i}{A_i} \qquad C_2 = \sum_{i=1}^{5} \frac{l_i}{A_i^{\,2}}$$

5.4 Pair of E-cores of rectangular section

Drawings of a pair of E-cores of the rectangular section are shown in Figure 4.

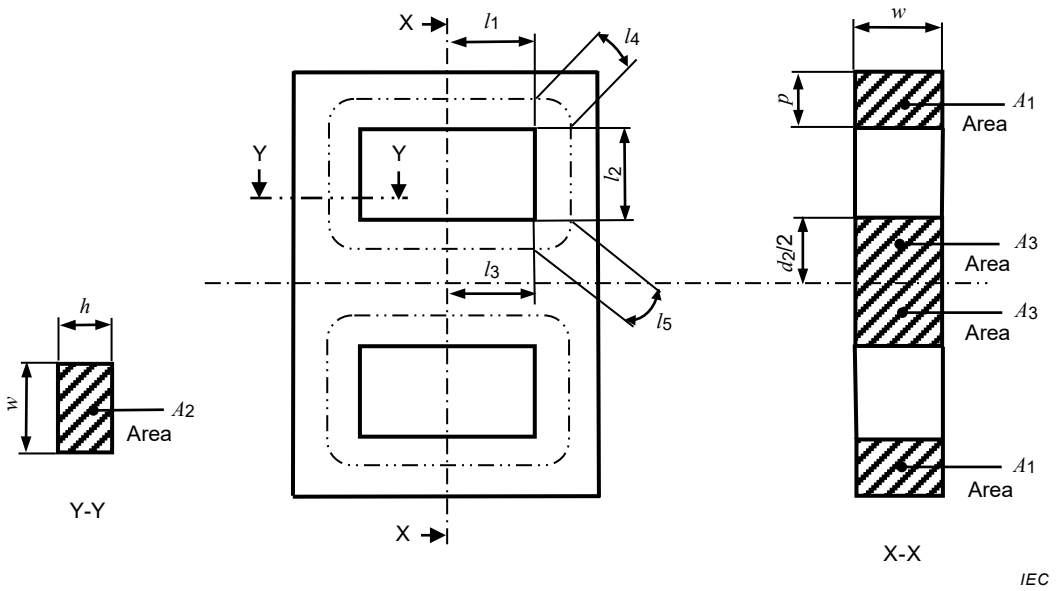

Figure 4 – Pair of E-cores of rectangular section

Area of half the centre limb: A_3

Mean length of flux paths at corners:

$$l_4 = \frac{\pi}{8}(p + h)$$

$$l_5 = \frac{\pi}{8}\left(\frac{d_2}{2} + h\right)$$

Mean areas associated with l_4 and l_5:

$$A_4 = \frac{A_1 + A_2}{2}$$

$$A_5 = \frac{A_2 + A_3}{2}$$

$$C_1 = \sum_{i=1}^{5} \frac{l_i}{A_i} \qquad C_2 = \sum_{i=1}^{5} \frac{l_i}{2A_i^2}$$

5.5 Pair of ETD/EER-cores

Drawings of a pair of ETD/EER-cores are shown in Figure 5.

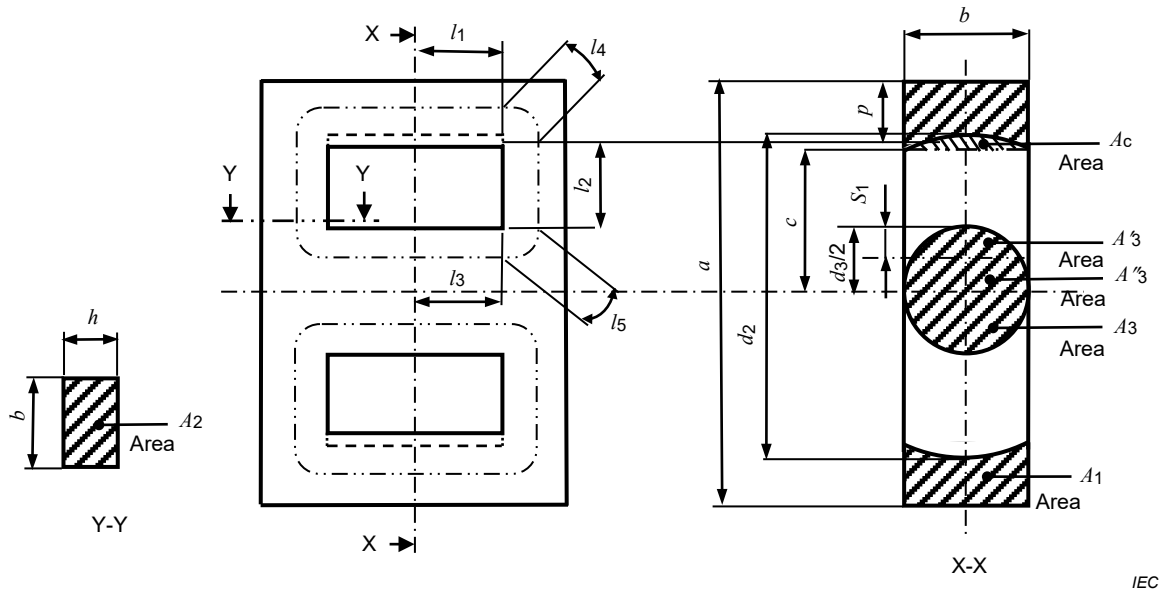

Figure 5 – Pair of ETD/EER-cores

A_1 is equal to the rectangle $b\left(\frac{1}{2}a - c\right)$ less the cap or segment A_c

$$A_c = \frac{1}{4}d_2^{\,2}\arcsin\left(\frac{b}{d_2}\right) - \frac{1}{4}b\sqrt{d_2^{\,2} - b^2}$$

$$A_1 = \frac{1}{2}ab - \frac{1}{4}b\sqrt{d_2^{\,2} - b^2} - \frac{1}{4}d_2^{\,2}\arcsin\left(\frac{b}{d_2}\right)$$

Mean length of flux path at back walls:

$$l_2 = \frac{1}{4}\left(d_2 + \sqrt{d_2^{\,2} - b^2}\right) - \frac{d_3}{2}$$

NOTE l_2 is taken from the mean value of $\frac{1}{2}(d_2 - d_3)$ and $(c - d_3/2)$.

Area of half the centre limb:

$$A_3 = A'_3 + A''_3$$

The condition to obtain $A'_3 = A''_3$ is

$$S_1 = 0{,}2980 d_3$$

Mean length of flux path at corners:

$$l_4 = \frac{\pi}{8}(p + h)$$