SLOVENSKI STANDARD
SIST ETS 300 299 E2:2003

01-december-2003

Širokopasovno digitalno omrežje z integriranimi storitvami (B-ISDN) – Omrežni dostop za celice nega uporabnika za hitrosti 155 520 kbit/s in 622 080 kbit/s – Vmesniki fizične plasti za aplikacije sistema B-ISDN

Broadband Integrated Services Digital Network (B-ISDN); Cell based user network access for 155 520 kbit/s and 622 080 kbit/s; Physical layer interfaces for B-ISDN applications

iTeh STANDARD PREVIEW
(standards.iteh.ai)
SIST ETS 300 299 E2:2003
https://standards.iteh.ai/catalog/standards/sist/3ba04e73-71ba-4d5f-a9dd-2121b72764cb/sist-ets-300-299-e2-2003

Ta slovenski standard je istoveten z: **ETS 300 299 Edition 2**

ICS:

33.080	Digitalno omrežje z integriranimi storitvami (ISDN)	Integrated Services Digital Network (ISDN)

SIST ETS 300 299 E2:2003 **en**

2003-01.Slovenski inštitut za standardizacijo. Razmnoževanje celote ali delov tega standarda ni dovoljeno.

SIST ETS 300 299 E2:2003

iTeh STANDARD PREVIEW
(standards.iteh.ai)

SIST ETS 300 299 E2:2003
https://standards.iteh.ai/catalog/standards/sist/3ba04e73-71ba-4d5f-a9dd-2121b72764cb/sist-ets-300-299-e2-2003

SIST ETS 300 299 E2:2003

EUROPEAN TELECOMMUNICATION STANDARD

ETS 300 299

June 1997

Second Edition

Source: ETSI TC-TM

Reference: RE/TM-03030

ICS: 33.020

Key words: B-ISDN, ISDN, UNI, ATM, interface, access, transmission

iTeh STANDARD PREVIEW
(standards.iteh.ai)

Broadband Integrated Services Digital Network (B-ISDN); Cell based user network access for 155 520 kbit/s and 622 080 kbit/s; Physical layer interfaces for B-ISDN applications

SIST ETS 300 299 E2:2003
https://standards.iteh.ai/catalog/standards/sist/3ba04e73-71ba-4d5f-a9dd-

ETSI

European Telecommunications Standards Institute

ETSI Secretariat

Postal address: F-06921 Sophia Antipolis CEDEX - FRANCE
Office address: 650 Route des Lucioles - Sophia Antipolis - Valbonne - FRANCE
X.400: c=fr, a=atlas, p=etsi, s=secretariat - **Internet:** secretariat@etsi.fr

Tel.: +33 4 92 94 42 00 - Fax: +33 4 93 65 47 16

Copyright Notification: No part may be reproduced except as authorized by written permission. The copyright and the foregoing restriction extend to reproduction in all media.

© European Telecommunications Standards Institute 1997. All rights reserved.

SIST ETS 300 299 E2:2003

iTeh STANDARD PREVIEW
(standards.iteh.ai)
SIST ETS 300 299 E2:2003
https://standards.iteh.ai/catalog/standards/sist/3ba04e73-71ba-4d5f-a9dd-2121b72764cb/sist-ets-300-299-e2-2003

Whilst every care has been taken in the preparation and publication of this document, errors in content, typographical or otherwise, may occur. If you have comments concerning its accuracy, please write to "ETSI Editing and Committee Support Dept." at the address shown on the title page.

SIST ETS 300 299 E2:2003

Contents

Foreword 7

1 Scope 9

2 Normative references 9

3 Definitions and abbreviations 10
3.1 Definitions 10
3.2 Abbreviations 10

4 Reference configuration at the user-network interface 11
4.1 Functional groups and reference points 11
4.2 Examples of physical realizations 12
4.3 Basic characteristics of the interfaces at T_B and S_B reference points 16
4.3.1 Characteristics of the interfaces at 155 520 kbit/s 16
4.3.1.1 Interface at the T_B reference point 16
4.3.1.2 Interface at the S_B reference point 16
4.3.1.3 Relationship between interfaces at S_B and T_B 16
4.3.2 Characteristics of the interfaces at 622 080 kbit/s 16
4.3.2.1 Interface at T_B reference point 16
4.4 Relationship between ISDN interfaces 16
4.5 Functional groups characteristics 16
4.5.1 Network termination 1 for B-ISDN 16
4.5.2 Network termination 2 for B-ISDN (B-NT2) 17
4.5.3 Terminal equipment for B-ISDN (B-TE) 17
4.5.3.1 Terminal equipment type 1 for B-ISDN (B-TE1) 17
4.5.3.2 Terminal equipment type 2 for B-ISDN (B-TE2) 17
4.5.4 Terminal adapter for B-ISDN (B-TA) 17

5 User network interface specifications 18
5.1 Interface location with respect to reference configuration 18
5.2 Interface location with respect to the wiring configuration 18

6 Service and layering aspects of the physical layer 18
6.1 Services provided to the ATM-layer 18
6.2 Service primitives exchanged with the ATM layer 18
6.3 Sublayering of the physical layer 19

7 Physical medium characteristics of the UNI at 155 520 kbit/s 19
7.1 Characteristics of the interface at the T_B and S_B reference points 19
7.1.1 Bit rate and interface symmetry 19
7.1.2 Physical characteristics 19
7.1.2.1 Electrical interface 19
7.1.2.1.1 Interface range 19
7.1.2.1.2 Transmission medium 19
7.1.2.1.3 Electrical parameters at interface points I_a and I_b 19
7.1.2.1.4 Electrical connectors 19
7.1.2.1.5 Line coding 20
7.1.2.1.6 Electromagnetic Compatibility/Interference (EMC/EMI) requirements 20
7.1.2.2 Optical interface 21
7.1.2.2.1 Attenuation range 21
7.1.2.2.2 Transmission medium 21
7.1.2.2.3 Optical parameters 22
7.1.2.2.3.1 Line coding 22

iTeh STANDARD PREVIEW
(standards.iteh.ai)
SIST ETS 300 299 E2:2003
https://standards.iteh.ai/catalog/standards/sist/3ba04e73-71ba-4d5f-a9dd-2121b72764cb/sist-ets-300-299-e2-2003

SIST ETS 300 299 E2:2003

7.1.2.2.3.2 Operating wavelength 22
7.1.2.2.3.3 Input and output port characteristics 22
7.1.2.2.4 Optical connectors 22
7.1.2.2.5 Safety requirements 22
7.1.2.3 Jitter and wander 22

8 Physical medium characteristics of the UNI at 622 080 kbit/s 23
8.1 Characteristics of the interface at the T_B and S_B reference points 23
8.1.1 Bit rate and interface symmetry 23
8.1.2 Physical characteristics 23
8.1.2.1 Attenuation range 23
8.1.2.2 Transmission medium 23
8.1.2.3 Optical parameters 23
8.1.2.3.1 Line coding 23
8.1.2.3.2 Operating wavelength 23
8.1.2.3.3 Input and output port characteristics 23
8.1.2.4 Optical connectors 24
8.1.2.5 Safety requirements 24
8.1.2.6 Jitter and wander 24

9 Power feeding 24
9.1 Provision of power 24
9.2 Power available at B-NT1 24
9.3 Feeding voltage 24
9.4 Safety requirements 25

10 Functions provided by the transmission convergence sublayer 25
10.1 Transfer capability 25
10.1.1 Interface at 155 520 kbit/s 25
10.1.2 Interface at 622 080 kbit/s 25
10.2 Physical layer aspects 25
10.2.1 Timing 25
10.2.2 Interface structure for 155 520 kbit/s and 622 080 kbit/s 25
10.3 Header Error Control (HEC) 26
10.3.1 HEC functions 26
10.3.2 HEC sequence generation 28
10.4 Idle cells 28
10.5 Cell delineation and scrambling 29
10.5.1 Cell delineation and scrambling objectives 29
10.5.1.1 Cell delineation algorithm 29
10.5.2 Cell delineation performance 30
10.5.3 Scrambler operation 30
10.5.3.1 Distributed sample scrambler (31st order) 30
10.5.3.2 Transmitter operation 30
10.5.3.3 Receiver operation 31
10.5.3.4 State transition diagram and mechanism 32

11 UNI related OAM functions 33
11.1 Transmission overhead allocation 33
11.2 OAM cell identification 34
11.3 Allocation of OAM functions in information field 34
11.4 Maintenance signals 38
11.5 Transmission performance monitoring 38
11.6 Control communication 38

12 Operational functions 38
12.1 Description of signals at the interface 38
12.1.1 Signals defined in ITU-T Recommendation I.610 38
12.1.2 Cell delineation signals 39

iTeh STANDARD PREVIEW
(standards.iteh.ai)
SIST ETS 300 299 E2:2003
https://standards.iteh.ai/catalog/standards/sist/3ba04e73-71ba-4d5f-a9dd-2121b72764cb/sist-ets-300-299-e2-2003

SIST ETS 300 299 E2:2003

12.2 Definitions of state tables at network and user sides....39
12.2.1 Layer 1 states on the user side of the interface....40
12.2.2 Layer 1 states at the network side of the interface....41
12.2.3 Definition of primitives....42
12.2.4 State tables....43

Annex A (informative): Impact of random bit errors on cell delineation performance....46

Annex B (informative): Distributed sample scrambler descrambler implementation example....47

History....49

iTeh STANDARD PREVIEW
(standards.iteh.ai)
SIST ETS 300 299 E2:2003
https://standards.iteh.ai/catalog/standards/sist/3ba04e73-71ba-4d5f-a9dd-2121b72764cb/sist-ets-300-299-e2-2003

SIST ETS 300 299 E2:2003

Blank page

iTeh STANDARD PREVIEW
(standards.iteh.ai)
SIST ETS 300 299 E2:2003
https://standards.iteh.ai/catalog/standards/sist/3ba04e73-71ba-4d5f-a9dd-2121b72764cb/sist-ets-300-299-e2-2003

SIST ETS 300 299 E2:2003

Foreword

This second edition European Telecommunication Standard (ETS) has been produced by the Transmission and Multiplexing (TM) Technical Committee of the European Telecommunications Standards Institute (ETSI).

This ETS defines the cell based user network access physical layer interfaces to be applied to the T_B, S_B reference points of the reference configurations of the Broadband Integrated Services Digital Network (B-ISDN) User-Network Interface (UNI) at 155 520 kbit/s and 622 080 kbit/s, for B-ISDN applications. It addresses separately the Physical Media Dependant (PMD) and Transmission Convergence (TC) sublayers used at these interfaces and addresses also the implementation of UNI related physical layer Operations And Maintenance (OAM) functions.

This ETS takes into account the recommendations given in ITU-T Recommendations I.413 [7], I.432.1 and I.432.2 [8].

Transposition dates	
Date of adoption:	2 May 1997
Date of latest announcement of this ETS (doa):	30 September 1997
Date of latest publication of new National Standard or endorsement of this ETS (dop/e):	31 March 1998
Date of withdrawal of any conflicting National Standard (dow):	31 March 1998

iTeh STANDARD PREVIEW
(standards.iteh.ai)
SIST ETS 300 299 E2:2003
https://standards.iteh.ai/catalog/standards/sist/3ba04e73-71ba-4d5f-a9dd-2121b72764cb/sist-ets-300-299-e2-2003

SIST ETS 300 299 E2:2003

Blank page

iTeh STANDARD PREVIEW
(standards.iteh.ai)
SIST ETS 300 299 E2:2003
https://standards.iteh.ai/catalog/standards/sist/3ba04e73-71ba-4d5f-a9dd-2121b72764cb/sist-ets-300-299-e2-2003

SIST ETS 300 299 E2:2003

1 Scope

This second edition European Telecommunication Standard (ETS) defines the physical layer interface to be applied to the S_B and T_B reference points of the reference configurations of the Broadband Integrated Services Digital Network (B-ISDN) cell based User-Network Interface (UNI) at 155 520 kbit/s and 622 080 kbit/s. It addresses separately the Physical Media Dependant (PMD) and Transmission Convergence (TC) sublayers used at these interfaces, and address also the implementation of UNI related physical layer OAM functions.

The selection of the physical medium for the interfaces at the S_B and T_B reference points should take into account that optical fibre is agreed as the preferred medium to be used to cable customer equipment. However, in order to allow the use of existing cabling of customer equipment, other transmission media (e.g. twisted pairs and coaxial cables) should not be precluded. Also, implementations should allow terminal interchangeability.

This ETS reflects in its structure and content the desire to take care of such early configurations and introduces a degree of freedom when choosing a physical medium at the physical layer.

2 Normative references

This ETS incorporates by dated and undated reference, provisions from other publications. These normative references are cited at the appropriate places in the text and the publications are listed hereafter. For dated references, subsequent amendments to or revisions of any of these publications apply to this ETS only when incorporated in it by amendment or revision. For undated references the latest edition of the publication referred to applies.

iTeh STANDARD PREVIEW
(standards.iteh.ai)

[1] ITU-T Recommendation G.652: "Characteristics of a single-mode optical fibre cable".

[2] ETS 300 166: "Transmission and Multiplexing (TM); Physical and electrical characteristics of hierarchical digital interfaces for equipment using the 2048 kbit/s - based plesiochronous or synchronous digital hierarchies".

SIST ETS 300 299 E2:2003
https://standards.iteh.ai/catalog/standards/sist/3ba04e73-71ba-4d5f-a9dd-2121b727f64eb/sist-ets-300-299-e2-2003

[3] ETS 300 232: "Transmission and Multiplexing (TM); Optical interfaces for equipments and systems relating to the Synchronous Digital Hierarchy [ITU-T Recommendation G.957 (1993) modified]".

[4] ITU-T Recommendation I.113: "Vocabulary of terms for broadband aspects of ISDN".

[5] ITU-T Recommendation I.321: "B-ISDN protocol reference model and its application".

[6] ITU-T Recommendation I.361 (1995): "B-ISDN ATM layer specification".

[7] ITU-T Recommendation I.413 (1993): "B-ISDN user-network interface".

[8] ITU-T Recommendation I.432.1 (1996): "B-ISDN user network interface - Physical layer specification for 155 520 kbit/s and 622 680 kbit/s - General characteristics".
ITU-T Recommendation I.432.2 (1996): "B-ISDN user network interface - Physical layer specification for 155 520 kbit/s and 622 680 kbit/s".

[9] ITU-T Recommendation I.610 (1995): "B-ISDN operation and maintenance principles and functions".

[10] ITU-T Recommendation X.200: "Information technology - Open Systems Interconnection - Basic reference model: The basic model".

[11] I-ETS 300 404: "Broadband Integrated Services Digital Network (B-ISDN); B-ISDN Operation And Maintenance (OAM) principles and functions".

SIST ETS 300 299 E2:2003

[12] IEC Publication 825-1: "Safety of laser products: Part 1: Equipment classification requirements and user's guide".

[13] IEC Publication 950: "Safety of information technology equipment, including electrical business equipment".

[14] ITU-T Recommendation G.825: "The control of jitter and wander within digital networks which are based on the synchronous digital hierarchy (SDH)".

[15] ITU-T Recommendation G.958: "Digital line systems based on the synchronous digital hierarchy for use on optical fibre cables".

[16] ITU-T Recommendation G.826: "Error performance parameters and objectives for international, constant bit rate digital paths at or above the primary rate".

3 Definitions and abbreviations

3.1 Definitions

For the purposes of this ETS, the definitions given in ITU-T Recommendation I.113 [4] apply, in particular for the definitions of **idle cell**, **valid cell** and **invalid cell**. In addition, the following definition applies:

to be defined: These items or values are not yet specified.

3.2 Abbreviations

For the purposes of this ETS, the following abbreviations apply:

iTeh STANDARD PREVIEW
(standards.iteh.ai)
SIST ETS 300 299 E2:2003
https://standards.iteh.ai/catalog/standards/sist/3ba04e73-71ba-4d5f-a9dd-2121b72764cb/sist-ets-300-299-e2-2003

AIS	Alarm Indication Signal
ATM	Asynchronous Transfer Mode
BER	Bit Error Ratio
B-ISDN	Broadband Integrated Services Digital Network
B-NT	B-ISDN Network Termination
B-TA	B-ISDN Terminal Adaptor
B-TE	B-ISDN Terminal Equipment
BIP	Bit Interleaved Parity
B-UNI	Broadband UNI
CATV	CAble TeleVision
CEC	Cell Error Control
CLP	Cell Loss Priority
CMI	Coded Mark Inversion
CRC	Cyclic Redundancy Check
DSS	Distributed Sample Scrambler
EDC	Error Detection Code
EMC	Electromagnetic Compatibility
EMI	ElectroMagnetic Interference
HEC	Header Error Control
ISDN	Integrated Services Digital Network
LAN	Local Area Network
LCD	Loss of Cell Delineation
LOM	Loss Of Maintenance cell
LOS	Loss Of Signal
LSB	Least Significant Bit
NMB	Number of Monitored Blocks
NNI	Network Node Interface
MA	Medium Adaptor
MBS	Monitoring Block Size
MPH	Management Physical Header
MSB	Most Significant Bit
NIC	Number of Included Cells
NRZ	Non Return to Zero
OAM	Operation And Maintenance

SIST ETS 300 299 E2:2003

OCD	Out of Cell Delineation
OSI	Open Systems Interconnection
P-AIS	Path Alarm Indication Signal
PH	Physical Header
PM	Physical Medium
ppm	parts per million
PRBS	Pseudo-Random Binary Sequence
P-REI	Path Remote Error Indication
PSN	Physical layer Sequence Number
RDI	Remode Defect Indication
SDH	Synchronous Digital Hierarchy
STI	Surface Transfer Impedance
TC	Transmission Convergence
TFV	Terminal Failure Voltage
UNA	User-Network Access
UNI	User-Network Interface
VCI	Virtual Channel Identifier
VPI	Virtual Path Identifier

4 Reference configuration at the user-network interface

4.1 Functional groups and reference points

The reference configurations defined for Integrated Services Digital Network (ISDN) basic access and primary access are considered general enough to be applicable to all aspects of the B-ISDN accesses.

Figure 1 shows the B-ISDN reference configurations which contain the following:

iTeh STANDARD PREVIEW
(standards.iteh.ai)

- functional groups: B-NT1, B-NT2, B-TE1, TE2, B-TE2, and B-TA;
- reference points: T_B, S_B and R.

SIST ETS 300 299 E2:2003
https://standards.iteh.ai/catalog/standards/sist/3ba04e73-71ba-4d5f-a9dd-2121b72764cb/sist-ets-300-299-e2-2003

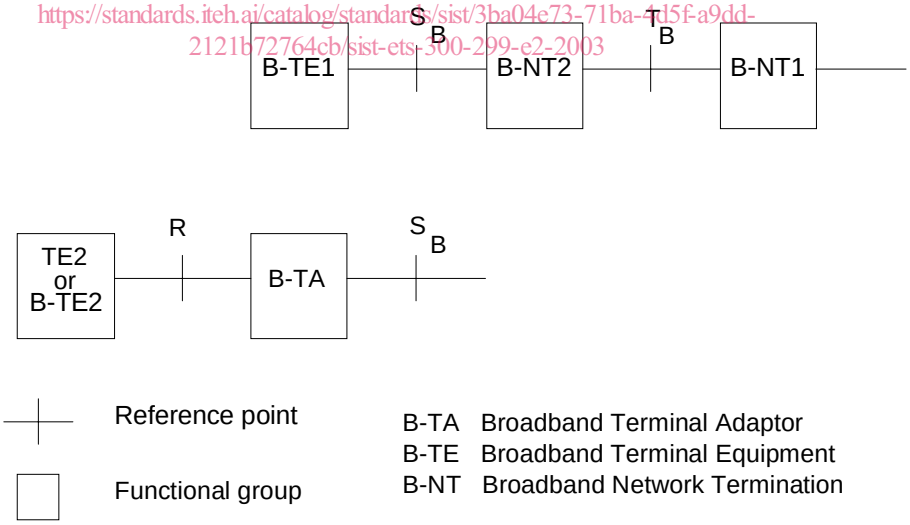

Figure 1: B-ISDN reference configurations

In order to clearly illustrate the broadband aspects, the notations for reference points and for functional groups with broadband capabilities are appended with the letter B (e.g. B-NT1, T_B). The broadband functional groups are equivalent to the functional groups defined in ISDN. Interfaces at the R reference point may or may not have broadband capabilities.

Interfaces at reference points S_B and T_B will be standardized. These interfaces will support all ISDN services.

SIST ETS 300 299 E2:2003

4.2 Examples of physical realizations

Figure 2 gives examples of physical configurations illustrating combinations of physical interfaces at various reference points. The examples cover configurations that could be supported by standardized interfaces at reference points S_B and T_B. Other configurations may also exist. For example, physical configurations of B-NT2 may be distributed, or use shared medium, to support Local Area Network (LAN) emulation and other applications.

Figure 3 illustrates possible physical configurations, but does not preclude alternative configurations. Whether a single interface at the S_B reference point can cover different configurations, as illustrated in figure 3, is for further study.

Figure 2 is subdivided into separate items as follows:

- figures 2a) and 2b) show separate interfaces at the S_B and T_B reference points;
- figures 2c) and 2d) show an interface at S_B but not at T_B;
- figures 2e) and 2f) show an interface at T_B but not at S_B;
- figures 2g) and 2h) show separate interfaces at S, S_B and T_B;
- figures 2i) and 2j) show interfaces at S_B and T_B which are coincident.

Additionally, figures 2b), 2d), 2f), 2h) and 2j) show an interface at reference point R.

iTeh STANDARD PREVIEW
(standards.iteh.ai)
SIST ETS 300 299 E2:2003
https://standards.iteh.ai/catalog/standards/sist/3ba04e73-71ba-4d5f-a9dd-2121b72764cb/sist-ets-300-299-e2-2003

SIST ETS 300 299 E2:2003

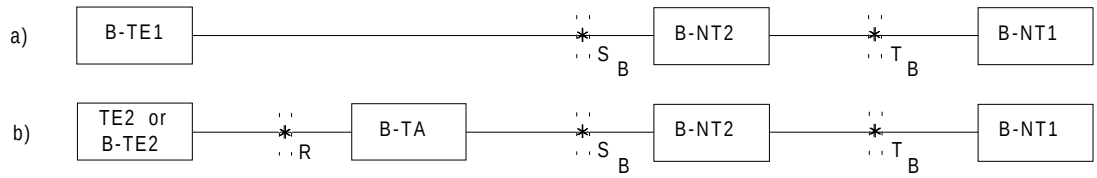

Configurations where B-ISDN physical interfaces occur at reference points S_B and T_B

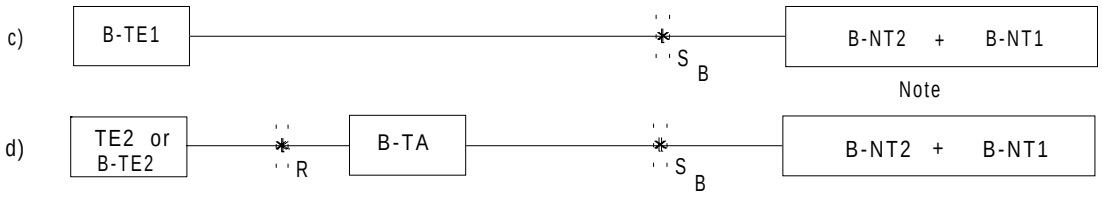

Configurations where B-ISDN physical interfaces occur at reference point S_B only

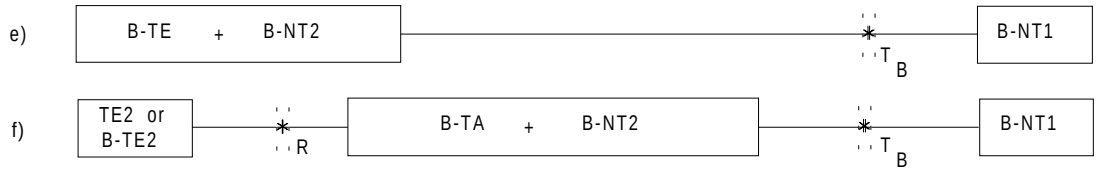

Configurations where B-ISDN physical interfaces occur at reference point T_B only

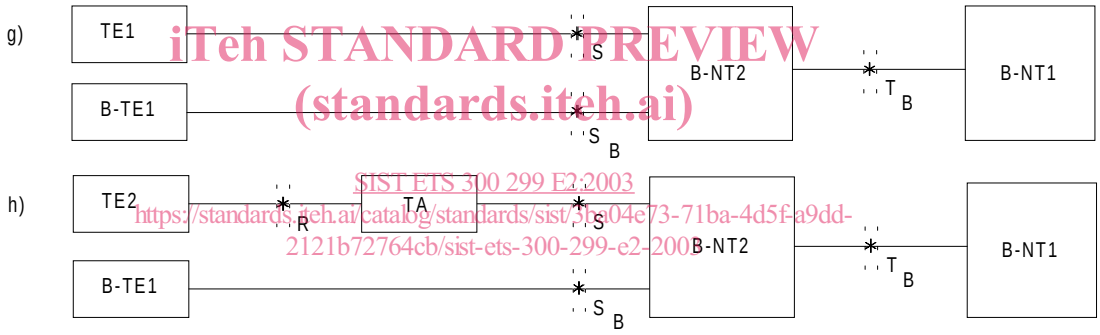

iTeh STANDARD PREVIEW
(standards.iteh.ai)
SIST ETS 300 299 E2:2003
https://standards.iteh.ai/catalog/standards/sist/5fca04e73-71ba-4d5f-a9dd-2121b72764cb/sist-ets-300-299-e2-2003

Configurations where B-ISDN and ISDN physical interfaces occur at reference points S, S_B and T_B

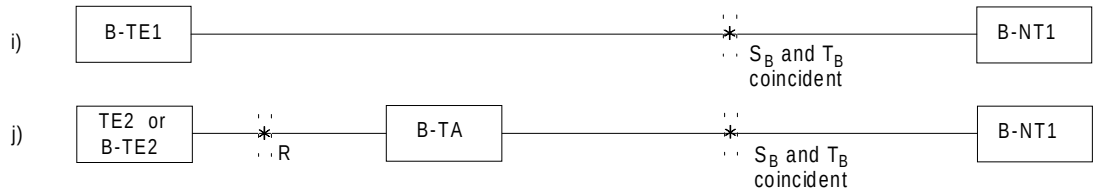

Configurations where a single B-ISDN physical interface occurs at a location where both reference points S_B and T_B coincide

NOTE: The needed for an access to a T_B reference point between B-NT1 and B-NT2 is for further study.

Figure 2: Examples of physical configurations for broadband user applications