SLOVENSKI STANDARD
SIST EN 50180-1:2016

01-januar-2016

Nadomešča:
SIST EN 50180:2010

Skoznjiki za napetosti nad 1 kV do 52 kV in tokove od 250 A do 3,15 kA za transformatorje, polnjene s tekočinami - 1. del: Splošne zahteve za skoznjike

Bushings above 1 kV up to 52 kV and from 250 A to 3,15 kA for liquid filled transformers - Part 1: General requirements for bushings

Durchführungen über 1 kV bis 52 kV und von 250 A bis 3,15 kA für flüssigkeitsgefüllte Transformatoren - Teil 1: Allgemeine Anforderungen für Durchführungen

Traversées de tensions supérieures à 1 kV jusqu'à 52 kV et de 250 A à 3,15 kA pour transformateurs immergés dans un liquide - Partie 1: Exigences générales relatives aux traversées

Ta slovenski standard je istoveten z: EN 50180-1:2015

ICS:

29.080.20	Skoznjiki	Bushings
29.180	Transformatorji. Dušilke	Transformers. Reactors

SIST EN 50180-1:2016 **en,fr,de**

EUROPEAN STANDARD

NORME EUROPÉENNE

EUROPÄISCHE NORM

EN 50180-1

October 2015

ICS 29.080.20

Supersedes EN 50180:2010

English Version

Bushings above 1 kV up to 52 kV and from 250 A to 3,15 kA for liquid filled transformers - Part 1: General requirements for bushings

Traversées de tensions supérieures à 1 kV jusqu'à 52 kV et de 250 A à 3,15 kA pour transformateurs immergés dans un liquide - Partie 1: Exigences générales relatives aux traversées

Durchführungen über 1 kV bis 52 kV und von 250 A bis 3,15 kA für flüssigkeitsgefüllte Transformatoren - Teil 1: Allgemeine Anforderungen für Durchführungen

This European Standard was approved by CENELEC on 2015-08-10. CENELEC members are bound to comply with the CEN/CENELEC Internal Regulations which stipulate the conditions for giving this European Standard the status of a national standard without any alteration.

Up-to-date lists and bibliographical references concerning such national standards may be obtained on application to the CEN-CENELEC Management Centre or to any CENELEC member.

This European Standard exists in three official versions (English, French, German). A version in any other language made by translation under the responsibility of a CENELEC member into its own language and notified to the CEN-CENELEC Management Centre has the same status as the official versions.

CENELEC members are the national electrotechnical committees of Austria, Belgium, Bulgaria, Croatia, Cyprus, the Czech Republic, Denmark, Estonia, Finland, Former Yugoslav Republic of Macedonia, France, Germany, Greece, Hungary, Iceland, Ireland, Italy, Latvia, Lithuania, Luxembourg, Malta, the Netherlands, Norway, Poland, Portugal, Romania, Slovakia, Slovenia, Spain, Sweden, Switzerland, Turkey and the United Kingdom.

CENELEC

European Committee for Electrotechnical Standardization
Comité Européen de Normalisation Electrotechnique
Europäisches Komitee für Elektrotechnische Normung

CEN-CENELEC Management Centre: Avenue Marnix 17, B-1000 Brussels

Ref. No. EN 50180-1:2015 E

Contents

Figures

Tables

European foreword

This document (EN 50180-1:2015) has been prepared by CLC/ TC 36A "Insulated bushings".

The following dates are fixed:

- latest date by which this document has to be implemented at national level by publication of an identical national standard or by endorsement (dop) 2016-08-10
- latest date by which the national standards conflicting with this document have to be withdrawn (dow) 2018-08-10

This document supersedes EN 50180:2010.

The only editorial modifications that have been done in EN 50180-1:2015 compared to EN 50180:2010 are the following:

1) EN 50180:2010 has been turned into EN 50180-1:2015 to allow the addition of two new parts;

2) an editorial correction of view "Y" on page 34 related to Figures A.16 and A.17 has been made.

Attention is drawn to the possibility that some of the elements of this document may be the subject of patent rights. CENELEC [and/or CEN] shall not be held responsible for identifying any or all such patent rights.

EN 50180 "*Bushings above 1 kV up to 52 kV and from 250 A to 3,15 kA for liquid filled transformers*" consists of the following parts:

– *Part 1: General requirements for bushings*;

– *Part 2: Requirement for bushing components*;

– *Part 3: Requirements for bushing fixations*.

Introduction

The object of this European Standard is to specify the requirements to ensure interchangeability of bushings having highest voltages above 1 kV up to 52 kV and rated currents from 250 A up to 3 150 A for insulating liquid filled transformers.

1 Scope

This European Standard is applicable to ceramic and resin insulated bushings having highest voltages above 1 kV up to 52 kV, rated currents from 250 A up to 3 150 A and frequencies from 15 Hz up to 60 Hz for insulating liquid filled transformers.

This European Standard establishes essential dimensions, to ensure interchangeability of bushings and to ensure adequate mounting and interchangeability of mating plug-in separable connectors of equivalent ratings.

2 Normative references

The following documents, in whole or in part, are normatively referenced in this document and are indispensable for its application. For dated references, only the edition cited applies. For undated references, the latest edition of the referenced document (including any amendments) applies.

EN 60137, *Insulated bushings for alternating voltages above 1 000 V (IEC 60137)*

EN 60672-3, *Ceramic and glass-insulating materials — Part 3: Specifications for individual materials (IEC 60672-3)*

EN 62155, *Hollow pressurized and unpressurized ceramic and glass insulators for use in electrical equipment with rated voltages greater than 1 000 V (IEC 62155)*

IEC/TS 60815 (all parts), *Selection and dimensioning of high-voltage insulators intended for use in polluted conditions*

NOTE It is highly advised to minimize the impact of bushings on the environment during all phases of their life (including manufacturing, operation during service life, dismantling after their end of life and disposal or recycling).

IEC Guide 109 and EN 62542 can be used as helpful reference.

3 Terms and definitions

For the purposes of this document, the following terms and definitions apply.

3.1
open type bushing
bushing, one end of which is immersed in an insulating liquid with the other end in ambient air and exposed or not exposed to external atmospheric conditions

3.2
plug-in type bushing
bushing, one end of which is immersed in an insulating medium and the other end designed to receive a separable insulated cable connector without which the bushing cannot function

3.3
separable connector
fully insulated termination permitting the connection and disconnection of the cable to and from the mating plug-in type bushing

3.4
interface type
bushing dimensions that insure mechanical and electrical interchangeability of bushing and separable connector of similar rating and type. Each interface type is designated by a letter or a number

3.5
bail holder
fixture which facilitates anchoring of an externally mounted device (called the bail) designed to prevent undesirable separation of a separable connector and a bushing. A bail holder may or may not be an integral part of a bushing and is an optional feature

4 Requirements

4.1 Application

Open type bushings covered by this standard shall be suitable for operation with one end fully immersed in an insulating liquid and with the other in air.

Plug-in type bushings covered by this standard shall be suitable for operation with one end partially or fully immersed in an insulating medium and with the other in a separable connector.

4.2 Standard values of maximum voltage (U_m)

The value of U_m of a bushing shall be chosen from the standard values of the highest voltage for equipment U_m as given below, in kilovolts:

12 - 24 - 36 - 52

4.3 Standard values of rated current (I_r)

The value of I_r of a bushing shall be chosen from the standard values given below, in amperes:

250 - 400 - 630 - 800 -1250 - 2000 - 3150

4.4 Compliance

Bushings shall meet the requirements of EN 60137.

4.5 Common dimensions

The dimensions necessary for interchangeability between open and plug-in type bushings shall be as specified in Figure 1 and Table 1.

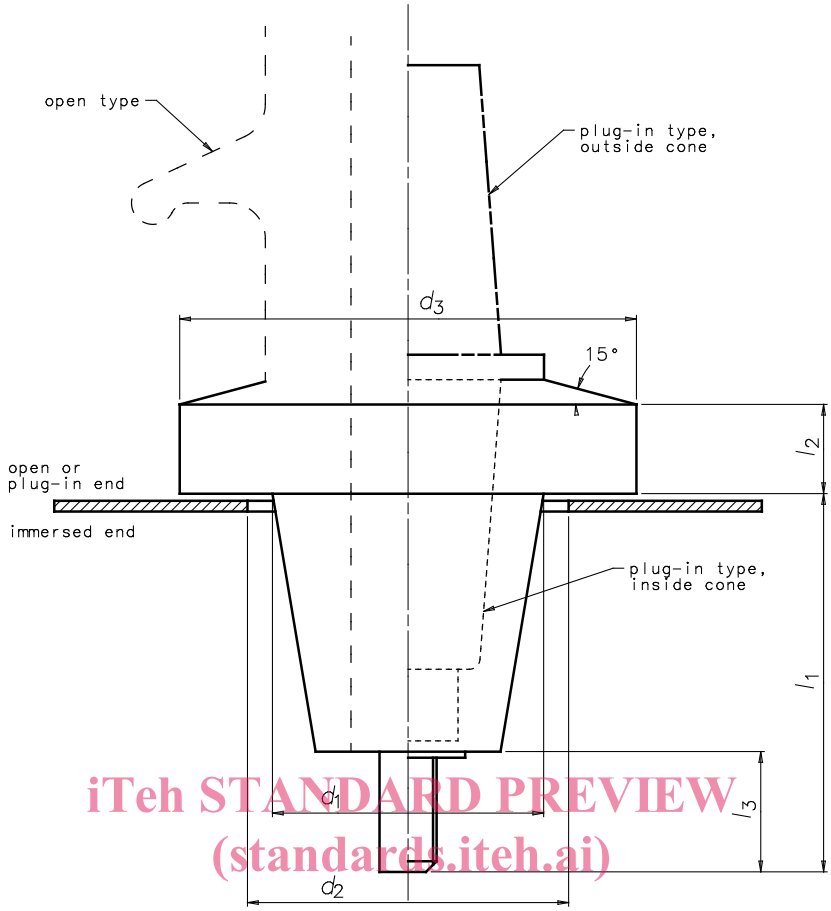

NOTE For open type bushings the internal connection may be a flexible conductor or a stem.

Figure 1 —Common dimensions for open and plug-in type bushings

Table 1 — Common dimensions for open and plug-in type bushings

I_r A	U_m kV	d_1 mm	d_2 $^{+2}_{0}$ mm	d_3 mm	l_1 max. mm	l_2 mm	l_3 max. mm
250	12 ÷ 36	77^{0}_{-5}	80^{0}	111^{0}_{-7}	145	25^{0}_{-2}	45
400 ÷ 630	12 ÷ 36	87^{0}_{-6}	90	128^{0}_{-8}	195	25^{0}_{-2}	75
800 ÷ 1 250	12 ÷ 36	107^{0}_{-7}	110	165^{0}_{-10}	215	30^{0}_{-2}	100
2 000 ÷ 3 150	12 ÷ 36	132^{0}_{-8}	135	185^{0}_{-11}	215	30^{0}_{-2}	100
250 ÷ 3 150	52	132^{0}_{-8}	135	185^{0}_{-11}	320	35^{+2}_{-2}	100

4.6 Detail dimensions and creepage distances of open type bushings

4.6.1 General recommendations

The dimensions necessary for interchangeability of open type bushings shall be as specified in the following figures (Figure 2 up to Figure 7) and tables (Table 2 up to Table 13).

These figures do not purport to show constructional details. The provision for arcing horns should be made if required.

Customized bushings are subject to an agreement between purchaser and manufacturer.

As a special requirement, bushings of 36 kV can be ordered with metallization or equivalent of the flange collar with extension “M” in the designation. The creepage distance, as indicated in the different tables of this standard, will be reduced of approximately 100 mm.

NOTE 52 kV bushings are always with metallization or equivalent solution.

4.6.2 250 A types 12 to 36 kV

Insulator types for 250 A may be clamped to the transformer tank using either the fixation method illustrated or a separate insulation piece on the inside of the tank.

This drawing does not purport to show constructional details.

All dimensions in mm

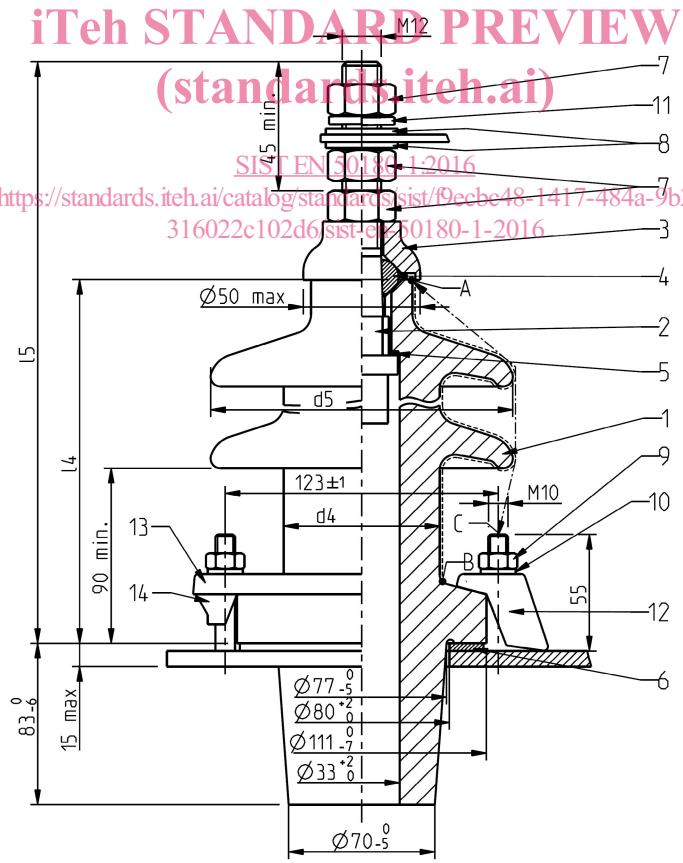

Key

← - - → arcing distance AC

· -------- · creepage distance AB

Figure 2 — 250 A types 12 to 36 kV

Table 2 — Dimensions, 250 A types 12 to 36 kV

Designation	U_m kV	Min. nominal creepage Distance AB (mm) Pollution level (IEC/TS 60815) b	c	d	e	Insulator type	Arcing Distance AC mm	l_4 max. mm	l_5 max. mm	d_4 max. mm	d_5 max. mm
12-250/P1 12-250/P2	12	192	240			1	145	190	270	75	140
12-250/P4 24-250/P2	12 24	384	480	300	372	2	260	304	384	80	150
24-250/P3 36-250/P1	24 36	576		600		3	315	357	437	80	155
24-250/P4 36-250/P3	24 36		720	900	744	4	465	516	596	80	155
36-250/P4	36				1 116	5	485	516	596	80	190

Table 3 — List of components, 250 A types 12 to 36 kV

Item	Quantity 12-250/P1	12-250/P2	12-250/P4	24-250/P2	24-250/P3	24-250/P4	36-250/P1	36-250/P3	36-250/P4	Designation		Remarks
1	1	1								Insulator	Type 1	Porcelain
			1	1							Type 2	
					1		1				Type 3	
						1		1			Type 4	
									1		Type 5	
2	1									Terminal stud [a]		Brass
3	1									Cap [a]		Brass
4	1									Gasket [a]		Insulating liquid resistant material
5	1									Spacer [a]		
6	1									Packing [a]		Insulating liquid resistant material
7	3									Nut		Brass
8	2									Washer		Brass
9	As required									Nut		Corrosion-resistant
10	As required									Washer		Corrosion-resistant
11	1									Spring-washer		Corrosion-resistant
Variant A: by means of clamping pieces												
12	As required									Clamping piece [a]		Corrosion-resistant
Variant B: by means of clamping ring												
13	1									Clamping ring [a]		Corrosion-resistant
14	As required									Clamping paw [a]		Corrosion-resistant

[a] Constructional details are not covered by this standard.

4.6.3 630 A types 12 to 36 kV

This drawing does not purport to show constructional details.

All dimensions in mm

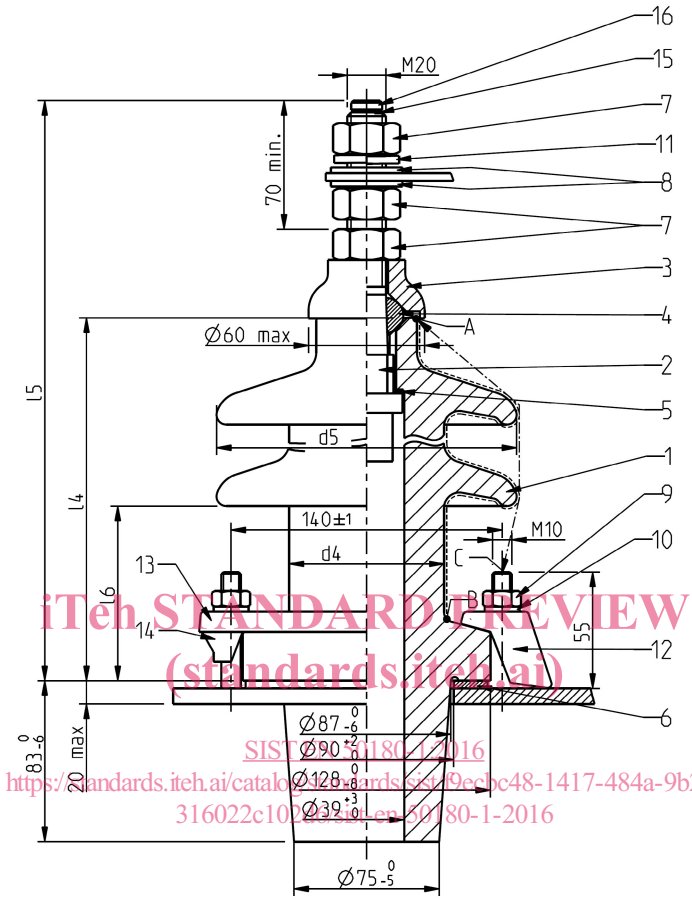

Key

← - - → arcing distance AC

· -------- · creepage distance AB

Figure 3 — 630 A types 12 to 36 kV

Table 4 — Dimensions, 630 A types 12 to 36 kV

Designation	U_m kV	Min. nominal creepage distance AB (mm) Pollution level (IEC/TS 60815) b	c	d	e	Inulator Type	Arcing distance AC mm	l_4 max. mm	l_5 max. mm	l_6 max. mm	d_4 max. mm	d_5 max. mm
12-630/P3	12	192	240	300		6	190	235	350	90	80	155
12-630/P4 24-630/P2	12 24	384	480		372	7	285	325	440	90	85	170
24-630/P4 36-630/P2	24 36	576	720	600	744	8	375	423	540	100	85	180
36-630/P4	36			900	1116	9	475	515	630	100	85	210