IEC 62149-11

Edition 1.0 2020-04

INTERNATIONAL STANDARD

NORME INTERNATIONALE

Fibre optic active components and devices – Performance standards – Part 11: Multiple channel transmitter/receiver chip scale package with multimode fibre interface

Composants et dispositifs actifs fibroniques – Normes de performances – Partie 11: Boîtier-puce émetteur/récepteur à plusieurs canaux avec interface à fibre multimodale

IEC 62149-11:2020-04(en-fr)

IEC Central Office
3, rue de Varembé
CH-1211 Geneva 20
Switzerland

Tel.: +41 22 919 02 11
info@iec.ch
www.iec.ch

About the IEC
The International Electrotechnical Commission (IEC) is the leading global organization that prepares and publishes International Standards for all electrical, electronic and related technologies.

About IEC publications
The technical content of IEC publications is kept under constant review by the IEC. Please make sure that you have the latest edition, a corrigendum or an amendment might have been published.

IEC publications search - webstore.iec.ch/advsearchform
The advanced search enables to find IEC publications by a variety of criteria (reference number, text, technical committee,…). It also gives information on projects, replaced and withdrawn publications.

IEC Just Published - webstore.iec.ch/justpublished
Stay up to date on all new IEC publications. Just Published details all new publications released. Available online and once a month by email.

IEC Customer Service Centre - webstore.iec.ch/csc
If you wish to give us your feedback on this publication or need further assistance, please contact the Customer Service Centre: sales@iec.ch.

Electropedia - www.electropedia.org
The world's leading online dictionary on electrotechnology, containing more than 22 000 terminological entries in English and French, with equivalent terms in 16 additional languages. Also known as the International Electrotechnical Vocabulary (IEV) online.

IEC Glossary - std.iec.ch/glossary
67 000 electrotechnical terminology entries in English and French extracted from the Terms and Definitions clause of IEC publications issued since 2002. Some entries have been collected from earlier publications of IEC TC 37, 77, 86 and CISPR.

A propos de l'IEC
La Commission Electrotechnique Internationale (IEC) est la première organisation mondiale qui élabore et publie des Normes internationales pour tout ce qui a trait à l'électricité, à l'électronique et aux technologies apparentées.

A propos des publications IEC
Le contenu technique des publications IEC est constamment revu. Veuillez vous assurer que vous possédez l'édition la plus récente, un corrigendum ou amendement peut avoir été publié.

Recherche de publications IEC - webstore.iec.ch/advsearchform
La recherche avancée permet de trouver des publications IEC en utilisant différents critères (numéro de référence, texte, comité d'études,…). Elle donne aussi des informations sur les projets et les publications remplacées ou retirées.

IEC Just Published - webstore.iec.ch/justpublished
Restez informé sur les nouvelles publications IEC. Just Published détaille les nouvelles publications parues. Disponible en ligne et une fois par mois par email.

Service Clients - webstore.iec.ch/csc
Si vous désirez nous donner des commentaires sur cette publication ou si vous avez des questions contactez-nous: sales@iec.ch.

Electropedia - www.electropedia.org
Le premier dictionnaire d'électrotechnologie en ligne au monde, avec plus de 22 000 articles terminologiques en anglais et en français, ainsi que les termes équivalents dans 16 langues additionnelles. Egalement appelé Vocabulaire Electrotechnique International (IEV) en ligne.

Glossaire IEC - std.iec.ch/glossary
67 000 entrées terminologiques électrotechniques, en anglais et en français, extraites des articles Termes et Définitions des publications IEC parues depuis 2002. Plus certaines entrées antérieures extraites des publications des CE 37, 77, 86 et CISPR de l'IEC.

IEC 62149-11

Edition 1.0 2020-04

INTERNATIONAL STANDARD

NORME INTERNATIONALE

Fibre optic active components and devices – Performance standards – Part 11: Multiple channel transmitter/receiver chip scale package with multimode fibre interface

Composants et dispositifs actifs fibroniques – Normes de performances – Partie 11: Boîtier-puce émetteur/récepteur à plusieurs canaux avec interface à fibre multimodale

INTERNATIONAL
ELECTROTECHNICAL
COMMISSION

COMMISSION
ELECTROTECHNIQUE
INTERNATIONALE

ICS 33.180.20

ISBN 978-2-8322-7793-5

Warning! Make sure that you obtained this publication from an authorized distributor.
Attention! Veuillez vous assurer que vous avez obtenu cette publication via un distributeur agréé.

CONTENTS

INTERNATIONAL ELECTROTECHNICAL COMMISSION

FIBRE OPTIC ACTIVE COMPONENTS AND DEVICES – PERFORMANCE STANDARDS –

Part 11: Multiple channel transmitter/receiver chip scale package with multimode fibre interface

FOREWORD

1) The International Electrotechnical Commission (IEC) is a worldwide organization for standardization comprising all national electrotechnical committees (IEC National Committees). The object of IEC is to promote international co-operation on all questions concerning standardization in the electrical and electronic fields. To this end and in addition to other activities, IEC publishes International Standards, Technical Specifications, Technical Reports, Publicly Available Specifications (PAS) and Guides (hereafter referred to as "IEC Publication(s)"). Their preparation is entrusted to technical committees; any IEC National Committee interested in the subject dealt with may participate in this preparatory work. International, governmental and non-governmental organizations liaising with the IEC also participate in this preparation. IEC collaborates closely with the International Organization for Standardization (ISO) in accordance with conditions determined by agreement between the two organizations.

2) The formal decisions or agreements of IEC on technical matters express, as nearly as possible, an international consensus of opinion on the relevant subjects since each technical committee has representation from all interested IEC National Committees.

3) IEC Publications have the form of recommendations for international use and are accepted by IEC National Committees in that sense. While all reasonable efforts are made to ensure that the technical content of IEC Publications is accurate, IEC cannot be held responsible for the way in which they are used or for any misinterpretation by any end user.

4) In order to promote international uniformity, IEC National Committees undertake to apply IEC Publications transparently to the maximum extent possible in their national and regional publications. Any divergence between any IEC Publication and the corresponding national or regional publication shall be clearly indicated in the latter.

5) IEC itself does not provide any attestation of conformity. Independent certification bodies provide conformity assessment services and, in some areas, access to IEC marks of conformity. IEC is not responsible for any services carried out by independent certification bodies.

6) All users should ensure that they have the latest edition of this publication.

7) No liability shall attach to IEC or its directors, employees, servants or agents including individual experts and members of its technical committees and IEC National Committees for any personal injury, property damage or other damage of any nature whatsoever, whether direct or indirect, or for costs (including legal fees) and expenses arising out of the publication, use of, or reliance upon, this IEC Publication or any other IEC Publications.

8) Attention is drawn to the Normative references cited in this publication. Use of the referenced publications is indispensable for the correct application of this publication.

9) Attention is drawn to the possibility that some of the elements of this IEC Publication may be the subject of patent rights. IEC shall not be held responsible for identifying any or all such patent rights.

International Standard IEC 62149-11 has been prepared by subcommittee 86C: Fibre optic systems and active devices, of IEC technical committee 86: Fibre optics.

The text of this International Standard is based on the following documents:

CDV	Report on voting
86C/1596/CDV	86C/1615/RVC

Full information on the voting for the approval of this International Standard can be found in the report on voting indicated in the above table.

This document has been drafted in accordance with the ISO/IEC Directives, Part 2.

A list of all parts in the IEC 62149 series, published under the general title *Fibre optic active components and devices – Performance standards*, can be found on the IEC website.

The committee has decided that the contents of this document will remain unchanged until the stability date indicated on the IEC website under "http://webstore.iec.ch" in the data related to the specific document. At this date, the document will be

- reconfirmed,
- withdrawn,
- replaced by a revised edition, or
- amended.

INTRODUCTION

A photonic chip scale package (CSP) is used to convert electrical signals into optical signals and vice-versa. This document covers the performance standards for photonic chip scale packages for use with multimode fibre through free space optics or multiple channel optical fibre connectors.

FIBRE OPTIC ACTIVE COMPONENTS AND DEVICES – PERFORMANCE STANDARDS –

Part 11: Multiple channel transmitter/receiver chip scale package with multimode fibre interface

1 Scope

This part of IEC 62149 specifies the performance standards for a multiple channel transmitter/receiver chip scale package (CSP) with multimode fibre interface that operates at up to 28 Gbit/s per channel. It specifies the parameters that apply, with clearly defined conditions, severities, and pass/fail criteria. The tests are intended to be run as an initial design verification to prove any product's ability to satisfy the performance standard's requirements.

A product that has been shown to meet all the requirements of a performance standard can be declared as complying with the performance standard, but is then controlled by a quality assurance/quality conformance program.

2 Normative references

There are no normative references in this document.

3 Terms and definitions, abbreviated terms and symbols

For the purposes of this document, the following terms, definitions and abbreviated terms apply.

ISO and IEC maintain terminological databases for use in standardization at the following addresses:

- IEC Electropedia: available at http://www.electropedia.org/
- ISO Online browsing platform: available at http://www.iso.org/obp

3.1 Terms and definitions

3.1.1
photonic chip scale package
chip O/E and/or E/O convertor, where electrical I/Os and optical I/Os are also included

3.2 Abbreviated terms

CDR	clock data recovery
CSP	chip scale package
DIN	inverted data input voltage
DIP	non-inverted data input voltage
E/O	electrical to optical
I/O	input/output
LD	laser diode
MOD	optical modulator
O/E	optical to electrical
OMA	optical modulation amplitude

PD	photodiode
RH	relative humidity
TIA	transimpedance amplifier
VDD	power supply voltage

3.3 Symbols

$\Delta\lambda$	spectral radiation bandwidth
E_x	extinction ratio
λ_c	central wavelength
P_o	optical output power
S	receiver sensitivity
T_{amb}	ambient temperature
T_C	case temperature
t_f	fall time
t_r	rise time
T_{stg}	storage temperature
V_{nom}	nominal operating voltage
V_O	data output voltage

4 Product parameters

4.1 Diagram

The chip scale package is constructed with a silicon photonics platform. Alternatives of 4ch transceiver (transmitter and receiver), 12ch transmitter, and 12ch receiver are specified. The block diagram for the 4ch transceiver is shown in Figure 1; the 12ch transmitter is shown in Figure 2, and the 12ch receiver is shown in Figure 3. The transmitter and receiver do not contain CDR functions, so the external CDR functions shall be provided as separate chips when needed. The terminal definitions for all alternatives are summarized in Table 1. The definitions for "p" and "n" for electrical signal inputs and outputs are "non-inverted" and "inverted" respectively.

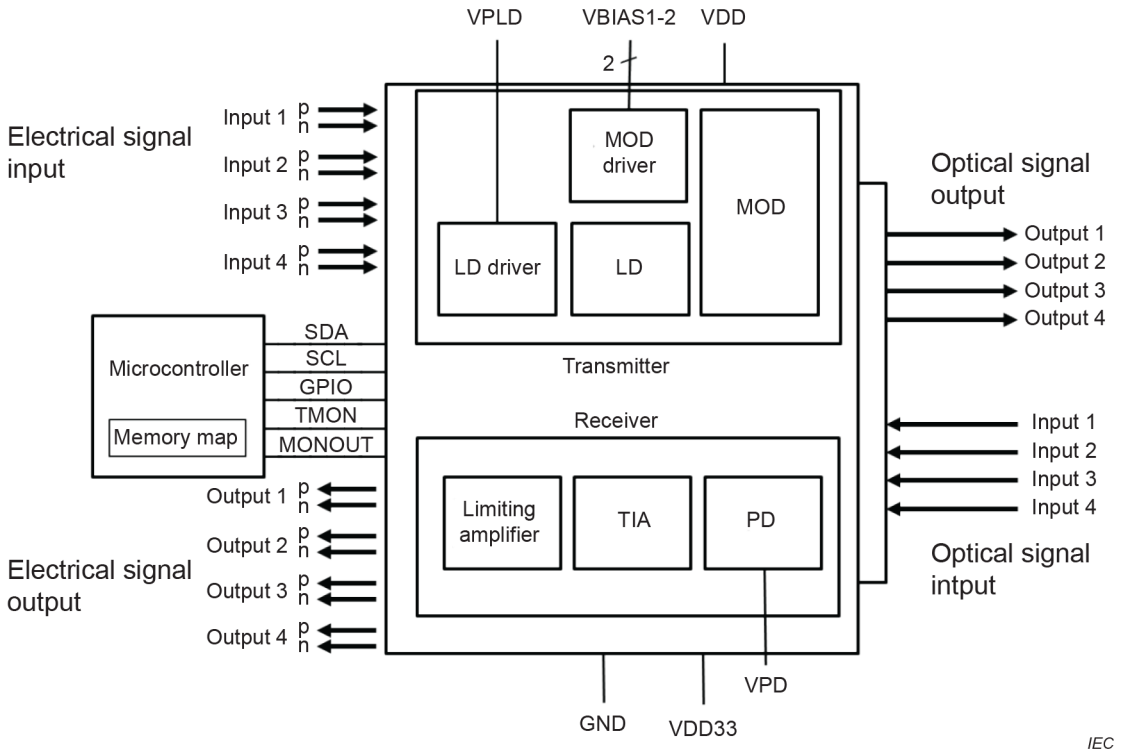

Figure 1 – Block diagram for chip scale package of 4ch transceiver

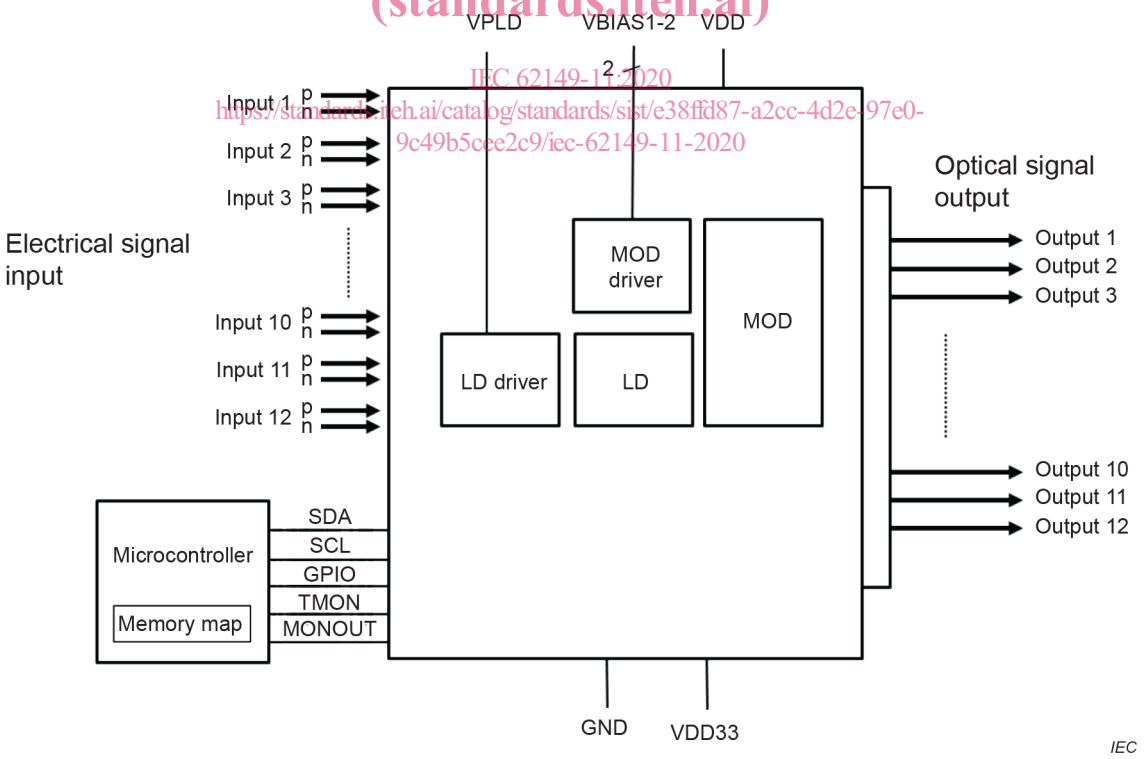

Figure 2 – Block diagram for chip scale package of 12ch transmitter

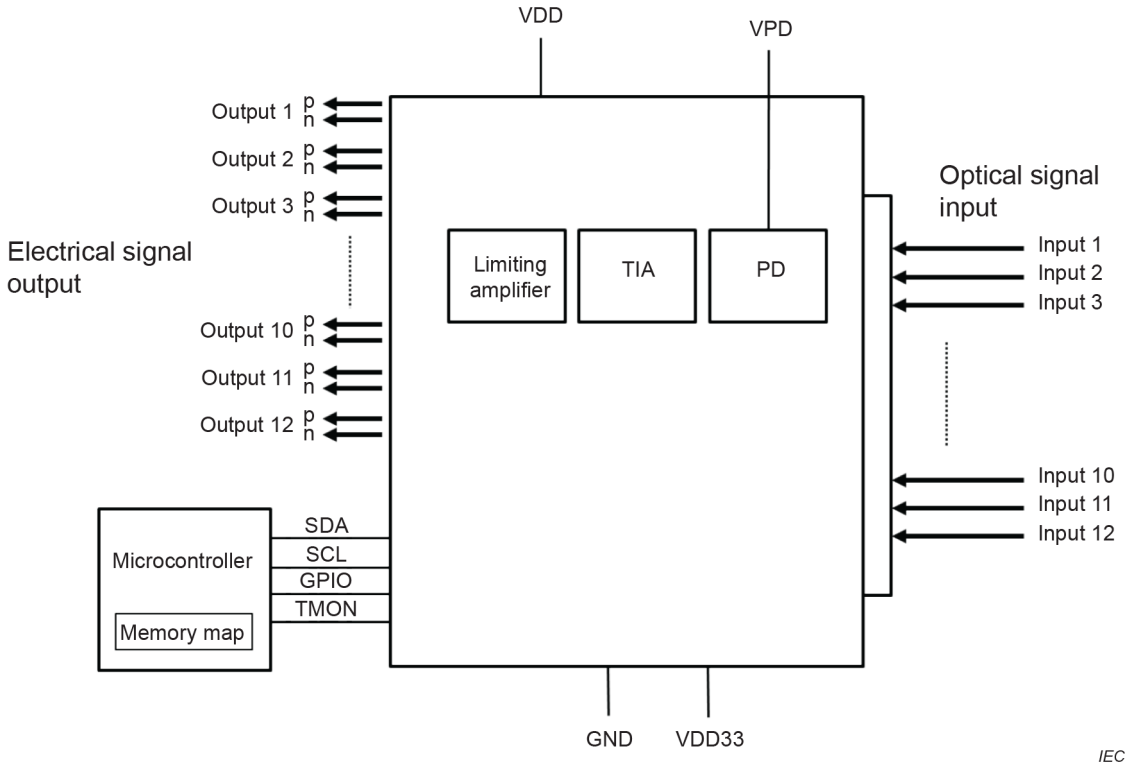

Figure 3 – Block diagram for chip scale package of 12ch receiver

Table 1 – Terminal function definitions

Symbol	Function
GND	Ground
GPIO	General purpose I/O
MONOUT	Optical power monitor output
SCL	2-wire serial interface clock
SDA	2-wire serial interface data
TMON	Temperature monitor output
VBIAS1	Bias voltage 1 for optical modulator
VBIAS2	Bias voltage 2 for optical modulator
VDD	1,0 V power supply
VDD33	3,3 V power supply
VPD	PD bias voltage
VPLD	LD driver power supply

4.2 Absolute limiting ratings

Absolute limiting (maximum and/or minimum) ratings are listed in Table 2.

It should not be assumed that limiting values of more than one parameter can be applied at any one time.

Table 2 – Absolute limiting ratings

Parameter	Symbol	Min.	Max.	Units	Notes
Storage temperature		−40	80	°C	
1,0 V Power supply voltage	VDD	−0,5	1,3	V	
3,3 V power supply voltage	VDD33	−0,5	4,0	V	
3,3 V power supply voltage for PD	VPD	−0,5	4,0	V	
3,3 V power supply voltage for LD	VPLD	−0,5	4,0	V	
Data input voltage – single ended	DIP, DIN	−0,5	VDD33 + 0,5	V	
Data input voltage – differential	|DIP – DIN|		1,3	V	
Control input voltage	SCL, SDA	−0,5	VDD33 + 0,5	V	
Bias voltage	VBIAS1, VBIAS2	−0,1	VDD33 + 0,1	V	
Analog input/output port for debug	GPIO	−0,5	4,0	V	
Relative humidity [a]	RH	5	95	%	
Soldering temperature			260 (for 10 s)	°C	
[a] No condensation allowed.					

4.3 Operating conditions

Operating conditions are listed in Table 3.

Table 3 – Operating conditions

Parameter	Symbol	Min.	Typ.	Max.	Units	Reference
Case temperature	T_C	0		70	°C	
1,0 V power supply voltage	VDD	1,0	1,02	1,1	V	
3,3 V power supply voltage	VDD33	3,135	3,3	3,465	V	
Signal rate per channel		1,0		28	Gbit/s	
MMF fibre length (2 000 MHz·km)		0,5		300	m	Maximum length is for the signal rate of 28 Gbit/s

The specifications in 4.4 describe the functional requirements which shall be satisfied for the operating conditions specified in Table 3.

Annex A describes a recommended optical interface scheme for optical coupling from multimode transmission fibre to chip scale package.

4.4 Functional specification

4.4.1 Transmitter electrical characteristics

Transmitter electrical characteristics are listed in Table 4.