INTERNATIONAL STANDARD

ISO 9236-3

First edition
1999-02-01

Photography — Sensitometry of screen/film systems for medical radiography —

Part 3:
Determination of sensitometric curve shape, speed and average gradient for mammography

Photographie — Sensitométrie des ensembles film/écran pour la radiographie médicale —

Partie 3: Détermination de la forme de la courbe sensitométrique, de la sensibilité et du contraste moyen pour la mammographie

Foreword

ISO (the International Organization for Standardization) is a worldwide federation of national standards bodies (ISO member bodies). The work of preparing International Standards is normally carried out through ISO technical committees. Each member body interested in a subject for which a technical committee has been established has the right to be represented on that committee. International organizations, governmental and non-governmental, in liaison with ISO, also take part in the work. ISO collaborates closely with the International Electrotechnical Commission (IEC) on all matters of electrotechnical standardization.

Draft International Standards adopted by the technical committees are circulated to the member bodies for voting. Publication as an International Standard requires approval by at least 75 % of the member bodies casting a vote.

International Standard ISO 9236-3 was prepared by Technical Committee ISO/TC 42, *Photography*.

ISO 9236 consists of the following parts, under the general title *Photography — Sensitometry of screen/film systems for medical radiography*:

— *Part 1: Determination of sensitometric curve shape, speed and average gradient*

— *Part 2: Determination of the modulation transfer function (MTF)*

— *Part 3: Determination of sensitometric curve shape, speed and average gradient for mammography*

Annexes A and B of this part of ISO 9236 are for information only.

International Organization for Standardization
Case postale 56 • CH-1211 Genève 20 • Switzerland
Internet iso@iso.ch

Printed in Switzerland

Introduction

This part of ISO 9236 provides methods for determining the sensitometric curve shape, the average gradient and the speed of radiographic screen/film/filmholder/processing systems used in mammography.

The sensitometric curve, which is also needed for the determination of other properties (as, for example, the modulation transfer function) is measured under low-scatter conditions via intensity scale X-ray sensitometry, using a sensitometer which is mainly based on the photometric inverse square law. For the determination of the sensitometric curve shape, the irradiation of the screen/film/filmholder combination need be measured only in relative units.

While the average gradient is determined from the sensitometric curve shape, speed has to be measured in a separate way, since the exposure conditions should simulate as closely as possible those which are used in practice. Therefore, scattered radiation is included, accompanied by a slight change of beam quality compared to the beam quality used for intensity scale sensitometry. The clinical exposure is simulated by using both an appropriate phantom and tube voltage. The screen/film/filmholder combination is exposed behind the phantom. The exposure shall be measured in absolute units (gray, Gy) in order to determine the speed.

Speed is generally dependent on X-ray energy, the amount of scattered radiation and the exposure time. Therefore, some variation in speed values may be expected under practical conditions. However, as the range of tube voltages applied in screen/film mammography is small, this part of ISO 9236 describes only one beam quality for speed measurement. The measurement conditions described in this part of ISO 9236 provide values for speed and average gradient which are representative of those found under practical conditions.

Photography — Sensitometry of screen/film systems for medical radiography —

Part 3:
Determination of sensitometric curve shape, speed and average gradient for mammography

1 Scope

This part of ISO 9236 specifies methods for determination of the sensitometric curve shape, average gradient and speed of a single sample of a screen/film/filmholder/processing system in mammography.

The filmholder may be any means which ensures close screen/film contact and prevents the film from being exposed to ambient light. In particular, the filmholder may be a light-tight vacuum bag, as often used in the laboratory, or a radiographic cassette as used in mammography.

NOTE — Hereafter, screen/film/filmholder combinations will be referred to as “combinations”, and will be referred to as “systems” when the processing is included.

2 Normative references

The following standards contain provisions which, through reference in this text, constitute provisions of this part of ISO 9236. At the time of publication, the editions indicated were valid. All standards are subject to revision, and parties to agreements based on this part of ISO 9236 are encouraged to investigate the possibility of applying the most recent editions of the standards indicated below. Members of IEC and ISO maintain registers of currently valid International Standards.

ISO 5-2:1991, *Photography — Density measurements — Part 2: Geometric conditions for transmission density.*

ISO 5-3:1995, *Photography — Density measurements — Part 3: Spectral conditions*.

ISO 554:1976, *Standard atmospheres for conditioning and/or testing — Specifications*.

3 Definitions

For the purposes of this part of ISO 9236, the following definitions apply.

3.1 air kerma, K**:** Energy which is transferred by ionizing radiation (for instance X-rays) to air molecules divided by the mass of air in that volume where the energy is released. The unit is the gray (Gy).

3.2 sensitometric curve: Plot of the density of a processed photographic film as a function of the logarithm of the exposure.

3.3 speed, S**:** Quantitative measure of the response of the screen/film system to radiant energy for the specified conditions of exposure, processing, and density measurement.

3.4 average gradient, $\overline{G}$**:** Slope of the straight line joining two specified points on a sensitometric curve.

3.5 net density D**:** Density of an exposed and processed film minus the density of an unexposed and processed sample of that film.

4 General requirements

4.1 Storage and handling conditions

The films and screens shall be stored according to the manufacturers' recommendations. Before and during exposures, the temperatures of the films and screens shall be maintained at (23 ± 2) °C (see ISO 554) and the moisture content of the film shall be such that it will be in equilibrium at a relative humidity of (50 ± 20) %.

4.2 Safelights

To eliminate the possibility of safelight illumination affecting the sensitometric results, all films shall be kept in total darkness during handling, exposure and processing.

4.3 X-ray equipment

For all tests described in this part of ISO 9236 a 6-pulse, 12-pulse, high frequency (multipulse), or constant-potential generator shall be used.

For dosimetry, a measuring detector shall be used that is calibrated to measure air kerma for the beam quality applied. The accuracy of readings shall be better than ± 5 % for collimated beams without scatter, and better than ± 7 % for radiation measurements behind the phantom when scattered radiation is included.

NOTE — A spherical ionization chamber is recommended for measurements where scattered radiation is involved. The centre of the spherical chamber is to be considered the reference point; the stem of the spherical chamber should point in a direction opposite to the focal spot direction.

4.4 Processing

Screen/film systems including either manual or automatic processing may be tested in accordance with this part of ISO 9236. Processing should be carried out in accordance with the film manufacturer's recommendations. Nothing shall be construed to require the disclosure of proprietary information.

No processing specifications are described in this part of ISO 9236, in recognition of the wide range of chemicals and equipment used. Speed and average gradient values provided by film manufacturers generally apply to the system when the film is processed in accordance with their recommendations so that the photographic characteristics specified for the process are produced. Processing information shall be provided by the film manufacturer or others who quote speed and average gradient values and shall specify the processing chemicals, times, temperatures, agitation, equipment and procedures used for each of the processing steps, and any additional information required to obtain the sensitometric results described. The values for speed and average gradient obtained using other processing procedures may differ significantly. The processing conditions selected by a person using this part of ISO 9236 are, in any case, part of the system being tested. Different speeds for a particular film may be achieved by varying the processes, but the user should be aware that other changes may accompany the speed changes.

In order to minimize any effects due to latent-image instability or process variability, all film samples shall be processed together, neither less than 30 min nor more than 4 h after exposure. Between exposure and processing,

the temperature of the film shall be maintained at (23 ± 2) °C, and its moisture content shall be such that the film will be in equilibrium at a relative humidity of (50 ± 20) %.

Since films are generally processed in practice a few minutes after exposure, the speed observed in practice may differ from that determined by this part of ISO 9236 due to latent-image fading of some films. Therefore, the speed measured with a time delay of 30 min to 4 h between exposure and processing shall be corrected to the value one would obtain if the film were processed soon after exposure. For the purposes of this part of ISO 9236, a time delay of 5,0 min is used for computing speed.

NOTES

1 The information about the necessary correction may easily be gained by exposing film strips in a light sensitometer and varying the time between exposure and processing. In the case of double-emulsion films, care should be taken that both front and back emulsions are exposed equally by the sensitometer.

2 Since the time required for the many individual exposures to obtain the sensitometric curve is comparatively long, a time delay of at least 30 min between exposure and processing is prescribed. That time delay is considered to be sufficient to minimize any differences in latent-image fading for the individual exposures.

The following processing information and accuracies shall be specified:

a) trade designations of all chemicals, if proprietary; otherwise, the formula;

b) temperature of the developer to within ± 0,3 °C;

c) temperature of other solutions to within ± 2 °C;

d) immersion times in the developer solution to within 3 %;

e) whether the developer is fresh or "seasoned" (if "seasoned", the type and amount of film used for seasoning), the density of the processed film and the replenishment procedure;

f) agitation specifications, in terms of volume of solution recirculated or rate at which a gas is used;

g) drying temperature to within ± 5 °C;

h) trade designation of processing equipment.

NOTE — The term "seasoned developer" means that the developer is no longer unused or fresh, but is already used and in a "normal working condition".

4.5 Densitometry

ISO standard visual diffuse transmission density of the processed images shall be measured using a densitometer complying with the geometric conditions specified in ISO 5-2 and spectral conditions specified in ISO 5-3. Readings shall be made in a uniform area of the image. The densities, D, shall be measured with an accuracy of $\Delta D/D = \pm 0{,}02$ or $\Delta D = \pm 0{,}02$, whichever is the greater.

5 Determination of sensitometric curve shape

In this part of ISO 9236, intensity scale sensitometry is described to determine curve shape. The intensity is modified by a change of the distance between the radiation source and the combination. As a consequence of secondary radiation sources in the beam, and due to beam attenuation by the air, the relationship between exposure and distance does not exactly obey the inverse-square law. Therefore that relationship shall be calibrated.

5.1 Beam qualities

For the determination of the sensitometric curve shape, either of the two beam qualities specified in table 1 may be used. The beam qualities can be achieved by an iterative procedure of half-value layer (HVL) measurements using the specified added filtration. The approximate X-ray tube voltages are recommended as starting values for this procedure (see 7.2.2 and figure 4).

Table 1 — Beam qualities for the determination of the sensitometric curve shape

Beam quality number	Anode material	Approximate X-ray tube voltage kV	Inherent filtration mm Mo	Added filtration mm Mo + mm Al	Half value Layer mm Al[1)]
I	Mo	28	0,03	0,00 2,1	0,63 ± 0,02
II	W	28	0,03	0,03 2,1	0,63 ± 0,02

1) The half-value layer is chosen to approximate the clinical exit beam from the breast. It shall be placed behind the added filtration.

Inherent and added filtration may differ from the numbers given in table 1, under the condition that the sum of the inherent filtration and the added filtration, known as total filtration, remains unchanged. For the total filtration, the tolerances are ± 0,005 mm for molybdenum filters and ± 0,1 mm for aluminium filters. The aluminium and molybdenum used as filter materials shall have a purity of at least 99,9 %.

5.2 Geometry for curve shape determination

The geometrical set-up of the measuring arrangement shall comply with figures 1 and 2. As a consequence of the influence of air on beam quality, the distance between the focal spot of the tube and the plane of the mammographic film shall not be greater than 3 m.

NOTE In practice, X-ray beams emerging from mammographic tubes are usually asymmetric insofar as they extend much more to the anode side than to the cathode side. In the laboratory, this beam asymmetry can often be reduced by changing diaphragming directly at the tube or by rotating the tube by several degrees. Symmetric X-ray beams, as shown in all the figures except figure 3, are not a precondition for applying the methods described in this part of ISO 9236.

The diaphragm B1 and the added filter(s) shall be positioned near the radiation source. The diaphragms B1 and B2 and the added filter(s) shall be in a fixed relation to the radiation source. The diaphragm B3 and the screen/film/filmholder combination or the measuring detector R2 shall be in a fixed relation at each distance from the radiation source. The incident face of the diaphragm B3 shall be (100 ± 5) mm in front of the plane of the mammographic film. If it has been confirmed that scattered radiation from walls, equipment, etc. does not influence the results, the diaphragm B3 may be omitted. To this end, the radiation aperture of the diaphragm B2 may be made variable so that the beam remains tightly collimated as the distance is changed.

A diaphragm B4, whose shortest dimension shall be at least 5 mm, may be positioned directly in front of the combination in order to limit the area of the film exposed.

The attenuating properties of the diaphragms shall be such that their transmission into shielded areas does not contribute to the results of the measurements by more than 0,1 %. The radiation aperture of the diaphragm B1 shall be large enough so that the penumbra of the radiation beam will be outside the sensitive volume of the monitoring detector R1 and the radiation aperture of the diaphragm B2.

The radiation aperture of the diaphragm B2 shall be small enough that no part of the beam can pass outside the diaphragm plate of the diaphragm B3 or B4, respectively. Collimation performed by the radiation aperture of the diaphragm B3 shall be as narrow as possible but still permit the X-ray beam to cover the radiation aperture of the diaphragm B4 or the sensitive volume of the measuring detector R2, respectively.

A monitoring detector R1 may be placed inside the beam utilized to expose the combination, if it is suitably transparent and free of structure, otherwise it shall be placed outside the beam. The precision of the monitoring detector R1 shall be better than ± 2 %.

An attenuating protective barrier shall be at least 450 mm beyond the last area involved in the measurement. The space between the combination or the measuring detector R2 and the protective barrier shall contain nothing but air.

5.3 Exposure

Each exposure of the combination shall be achieved in one uninterrupted irradiation. The irradiation time shall be in the range of 0,5 s to 1,5 s and shall be kept constant for all exposures.

NOTE 1 With the use of intensifying screens, reciprocity law failure and the intermittency effect may occur. In order to avoid the influence of these effects, a single irradiation with a constant irradiation time in the specified range of irradiation times is required for each exposure.

The different values of air kerma shall be obtained preferably by varying the distance from the radiation source to the plane of the mammographic film. It shall be verified that the HVL, according to table 1, remains within the tolerance for all distances used. Additionally, the tube current may be varied. It shall be verified that the variation of tube current does not change the beam quality. The maximum increments of $\log_{10}$ exposure shall not be greater than 0,1.

Dimensions in metres

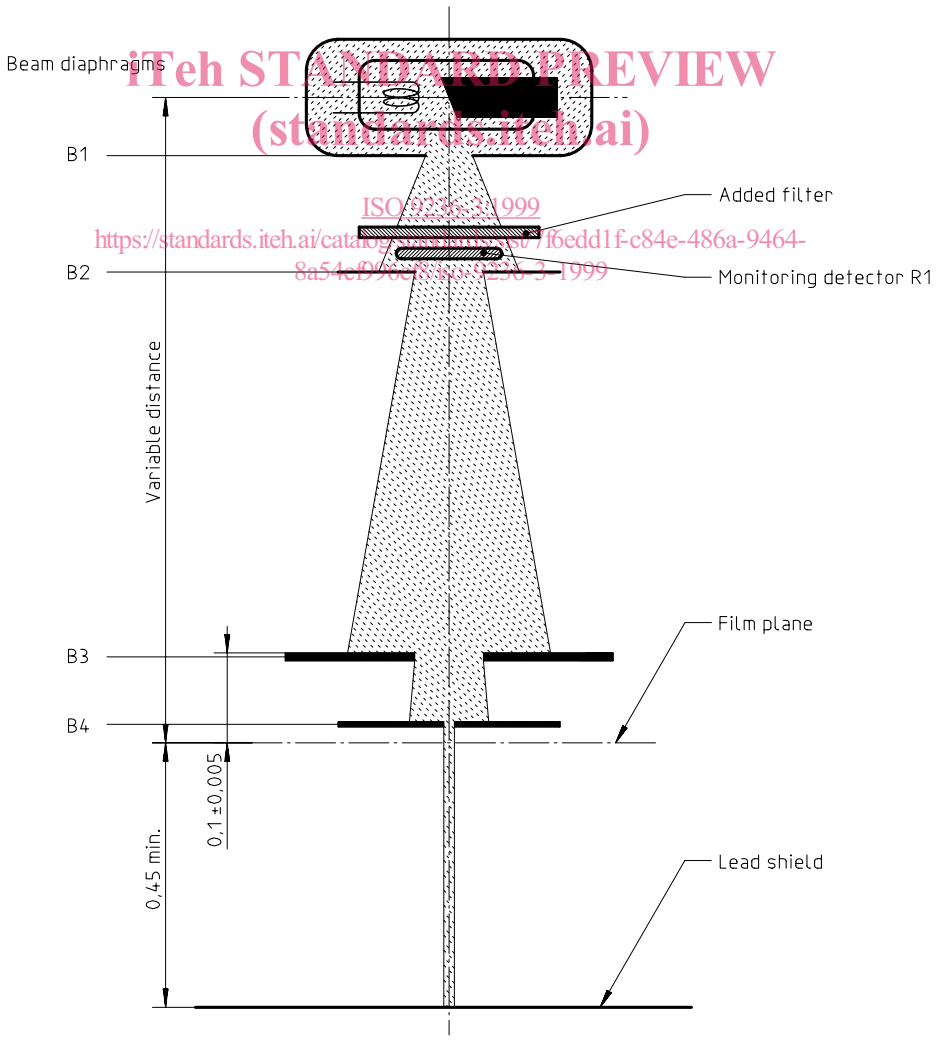

Figure 1 — Geometric set-up of the inverse-square-law sensitometer for irradiation of a screen/film/filmholder combination

Dimensions in metres

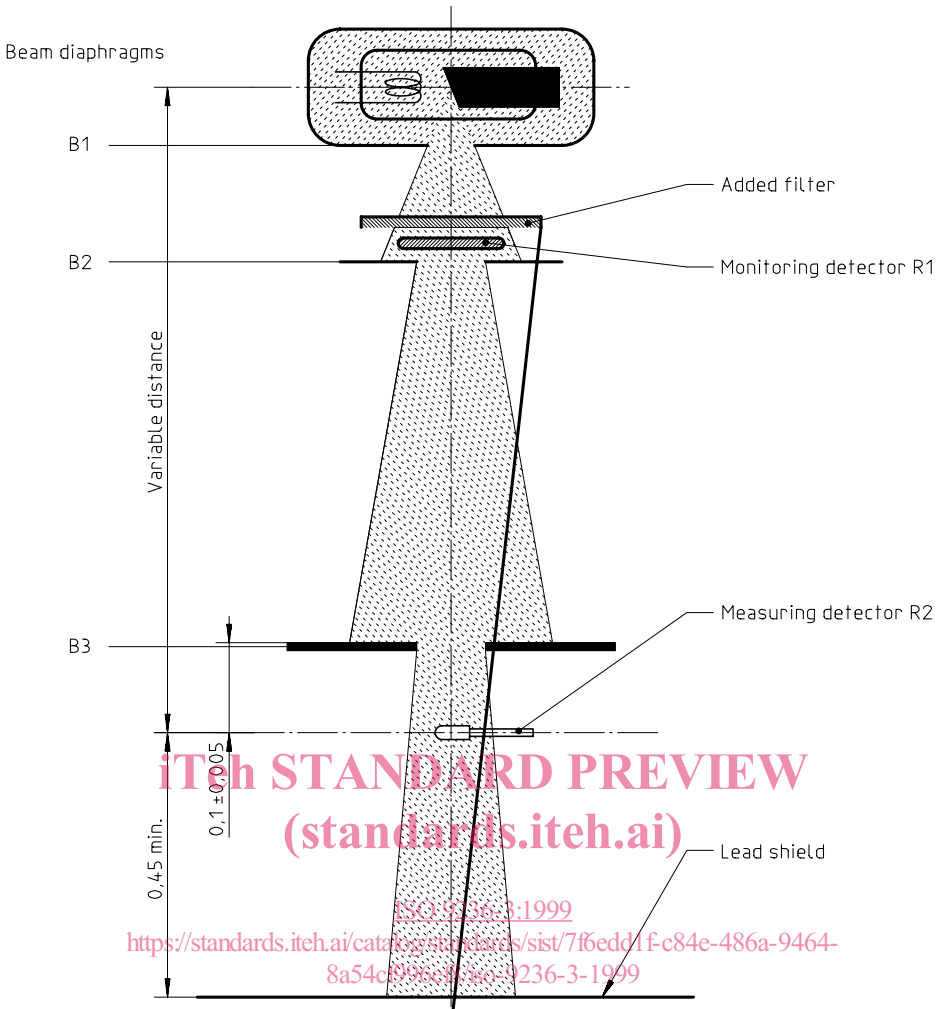

Figure 2 — Geometric set-up for calibration of the inverse-square-law sensitometer

For determination of the sensitometric curve, at least 20 different exposures are necessary, equally distributed on a logarithmic scale, that produce net densities from 0,1 to 2,1. To accurately define the curve at low densities, at least three exposures, producing net densities between 0,1 and 0,25, shall be made. The time interval between the different exposures should normally not exceed 30 s, but shall never exceed 2 min.

NOTES

2 An upper net density value of about 2,1 is just the minimum needed for determination of the average gradient $\bar{\ }$ as described in clause 6. Especially in mammography, the sensitometric curve shape at much higher density values is also very important. In addition, if a mathematical algorithm is used to find a smooth curve describing the measured relation between $\log_{10}$ air kerma and density (see 5.4), then it may be necessary to produce net densities well above 2,1 to reduce a discontinuity error.

3 Since it is difficult to manage all necessary steps of moving the filmholder, changing the distance and verifying the monitor reading, an automated procedure is recommended (see annex A).

5.4 Evaluation

The density is plotted against the corresponding $\log_{10}$ air kerma values. Through the points, a smooth curve is drawn either by hand or by an appropriate algorithm. It should be possible to read densities and relative exposure values (log to the base 10 units) to the nearest 0,01 from the curve (figure 3).

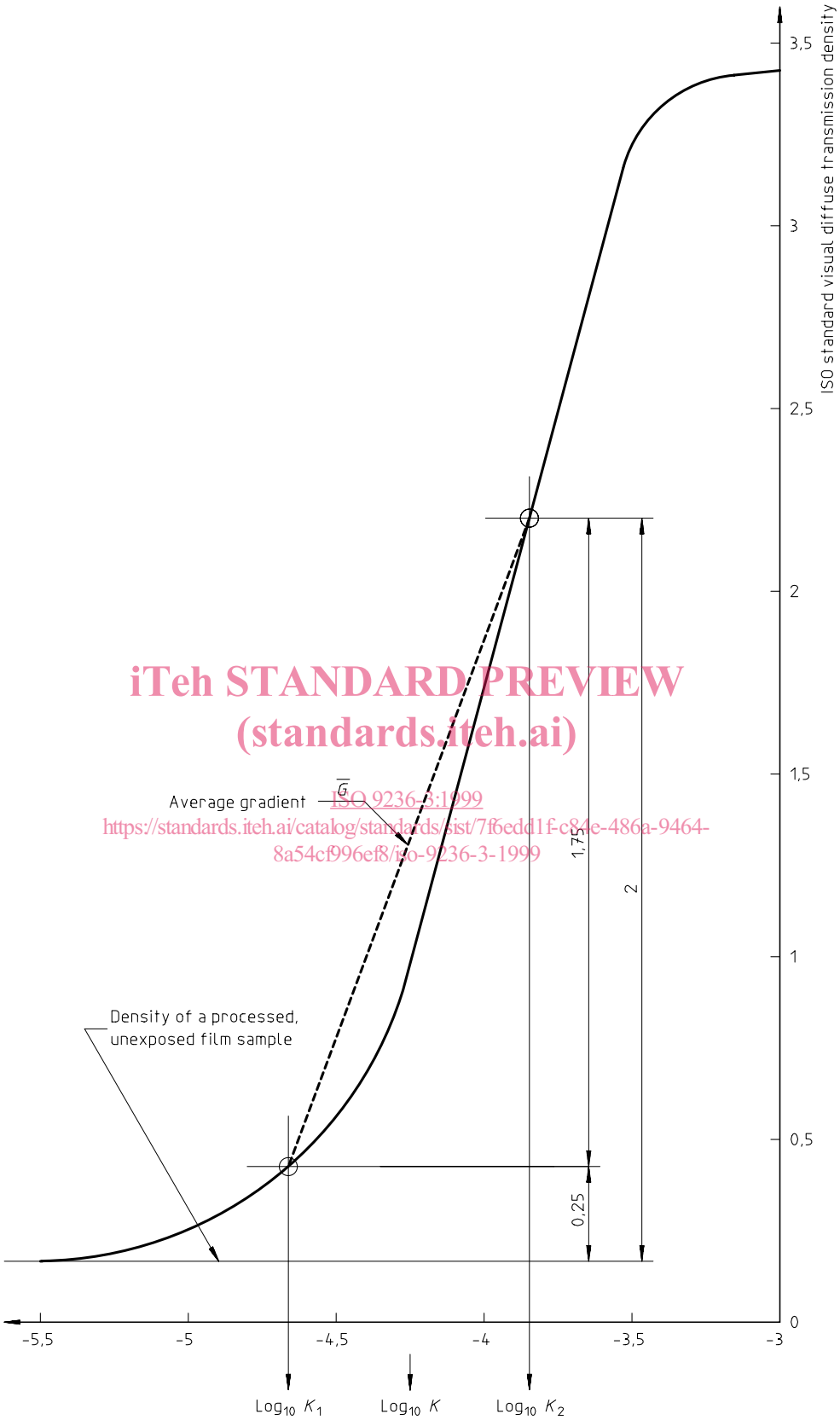

Figure 3 — Example of a sensitometric curve of a screen/film system for mammography