SLOVENSKI STANDARD
SIST EN 62714-2:2015

01-september-2015

Oblika izmenjave tehničnih podatkov za uporabo v industrijskem inženiringu avtomatizacije sistemov - Označevalni jezik za avtomatizacijo - 2. del: Vloga razreda knjižnice (IEC 62714-2:2015)

Engineering Data Exchange format for use in industrial automation systems engineering - Automation Markup Language - Part 2: Role class libraries (IEC 62714-2:2015)

Datenaustauschformat für Planungsdaten industrieller Automatisierungssysteme - Automation markup language – Teil 2: Rollenbibliotheken (IEC 62714-2:2015)

iTeh STANDARD PREVIEW
(standards.iteh.ai)

Format d'échange de données techniques pour une utilisation dans l'ingénierie des systèmes d'automatisation industrielle - Automation markup language - Partie 2: Bibliothèques de classes de rôles (IEC 62714-2:2015)

SIST EN 62714-2:2015
https://standards.iteh.ai/catalog/standards/sist/d7665c67-b0c8-4aaa-8b12-f53cbac2b1c0/sist-en-62714-2-2015

Ta slovenski standard je istoveten z: EN 62714-2:2015

ICS:

25.040.40	Merjenje in krmiljenje industrijskih postopkov	Industrial process measurement and control
35.060	Jeziki, ki se uporabljajo v informacijski tehniki in tehnologiji	Languages used in information technology
35.240.50	Uporabniške rešitve IT v industriji	IT applications in industry

SIST EN 62714-2:2015 en

2003-01.Slovenski inštitut za standardizacijo. Razmnoževanje celote ali delov tega standarda ni dovoljeno.

SIST EN 62714-2:2015

iTeh STANDARD PREVIEW
(standards.iteh.ai)

SIST EN 62714-2:2015
https://standards.iteh.ai/catalog/standards/sist/d76b5c67-b0eb-4aaa-86f2-1b3c6ab2b130/sist-en-62714-2-2015

SIST EN 62714-2:2015

EUROPEAN STANDARD

NORME EUROPÉENNE

EUROPÄISCHE NORM

EN 62714-2

May 2015

ICS 25.040.40; 35.060; 35.240.50

English Version

Engineering data exchange format for use in industrial automation systems engineering - Automation markup language - Part 2: Role class libraries (IEC 62714-2:2015)

Format d'échange de données techniques pour une utilisation dans l'ingénierie des systèmes d'automatisation industrielle - Automation markup language - Partie 2: Bibliothèques de classes de rôles (IEC 62714-2:2015)

Datenaustauschformat für Planungsdaten industrieller Automatisierungssysteme - Automation markup language - Teil 2: Rollenbibliotheken (IEC 62714-2:2015)

This European Standard was approved by CENELEC on 2015-05-04. CENELEC members are bound to comply with the CEN/CENELEC Internal Regulations which stipulate the conditions for giving this European Standard the status of a national standard without any alteration.

iTeh STANDARD PREVIEW
(standards.iteh.ai)

Up-to-date lists and bibliographical references concerning such national standards may be obtained on application to the CEN-CENELEC Management Centre or to any CENELEC member.

This European Standard exists in three official versions (English, French, German). A version in any other language made by translation under the responsibility of a CENELEC member into its own language and notified to the CEN-CENELEC Management Centre has the same status as the official versions.

SIST EN 62714-2:2015
https://standards.iteh.ai/catalog/standards/sist/d76b5c67-b0eb-4aaa-86f2-1b3c6ab2b130/sist-en-62714-2-2015

CENELEC members are the national electrotechnical committees of Austria, Belgium, Bulgaria, Croatia, Cyprus, the Czech Republic, Denmark, Estonia, Finland, Former Yugoslav Republic of Macedonia, France, Germany, Greece, Hungary, Iceland, Ireland, Italy, Latvia, Lithuania, Luxembourg, Malta, the Netherlands, Norway, Poland, Portugal, Romania, Slovakia, Slovenia, Spain, Sweden, Switzerland, Turkey and the United Kingdom.

CENELEC

European Committee for Electrotechnical Standardization
Comité Européen de Normalisation Electrotechnique
Europäisches Komitee für Elektrotechnische Normung

CEN-CENELEC Management Centre: Avenue Marnix 17, B-1000 Brussels

© 2015 CENELEC All rights of exploitation in any form and by any means reserved worldwide for CENELEC Members.

SIST EN 62714-2:2015

Foreword

The text of document 65E/300/CDV, future edition 1 of IEC 62714-2, prepared by SC 65E "Devices and integration in enterprise systems", of IEC/TC 65 "Industrial-process measurement, control and automation" was submitted to the IEC-CENELEC parallel vote and approved by CENELEC as EN 62714-2:2015.

The following dates are fixed:

- latest date by which the document has to be implemented at national level by publication of an identical national standard or by endorsement (dop) 2016-02-04
- latest date by which the national standards conflicting with the document have to be withdrawn (dow) 2018-05-04

Attention is drawn to the possibility that some of the elements of this document may be the subject of patent rights. CENELEC [and/or CEN] shall not be held responsible for identifying any or all such patent rights.

iTeh STANDARD PREVIEW
(standards.iteh.ai)

Endorsement notice

SIST EN 62714-2:2015
https://standards.iteh.ai/catalog/standards/sist/d76b5c67-b0eb-4aaa-86f2-1b3c6ab2b130/sist-en-62714-2-2015

The text of the International Standard IEC 62714-2:2015 was approved by CENELEC as a European Standard without any modification.

In the official version, for Bibliography, the following notes have to be added for the standards indicated:

IEC 61512-1	NOTE	Harmonized as EN 61512-1.
IEC 62264-1:2013	NOTE	Harmonized as EN 62264-1:2013 (not modified).

SIST EN 62714-2:2015

Annex ZA
(normative)

Normative references to international publications with their corresponding European publications

The following documents, in whole or in part, are normatively referenced in this document and are indispensable for its application. For dated references, only the edition cited applies. For undated references, the latest edition of the referenced document (including any amendments) applies.

NOTE 1 When an International Publication has been modified by common modifications, indicated by (mod), the relevant EN/HD applies.

NOTE 2 Up-to-date information on the latest versions of the European Standards listed in this annex is available here: www.cenelec.eu.

Publication	Year	Title	EN/HD	Year
IEC 61360-4	-	Standard data element types with associated classification scheme for electric components - Part 4: IEC reference collection of standard data element types and component classes	EN 61360-4	-
IEC 62424	2008	Representation of process control engineering - Requests in P&I diagrams and data exchange between P&ID tools and PCE-CAE tools	EN 62424	2009
IEC 62714-1	2014	Engineering data exchange format for use in industrial automation systems engineering - Automation markup language - Part 1: Architecture and general requirements	EN 62714-1	2014

iTeh STANDARD PREVIEW
(standards.iteh.ai)
SIST EN 62714-2:2015
https://standards.iteh.ai/catalog/standards/sist/d76b5c67-b0eb-4aaa-86f2-1b3c6ab2b130/sist-en-62714-2-2015

SIST EN 62714-2:2015

iTeh STANDARD PREVIEW
(standards.iteh.ai)

SIST EN 62714-2:2015
https://standards.iteh.ai/catalog/standards/sist/d76b5c67-b0eb-4aaa-86f2-1b3c6ab2b130/sist-en-62714-2-2015

SIST EN 62714-2:2015

IEC 62714-2

Edition 1.0 2015-03

INTERNATIONAL STANDARD

NORME INTERNATIONALE

colour inside

Engineering data exchange format for use in industrial automation systems engineering – Automation markup language – Part 2: Role class libraries

iTeh STANDARD PREVIEW
(standards.iteh.ai)
SIST EN 62714-2:2015

Format d'échange de données techniques pour une utilisation dans l'ingénierie des systèmes d'automatisation industrielle – Automation markup language – Partie 2: Bibliothèques de classes de rôles

INTERNATIONAL ELECTROTECHNICAL COMMISSION

COMMISSION ELECTROTECHNIQUE INTERNATIONALE

ICS 25.040.40; 35.06; 35.240.50

ISBN 978-2-8322-2407-6

Warning! Make sure that you obtained this publication from an authorized distributor.
Attention! Veuillez vous assurer que vous avez obtenu cette publication via un distributeur agréé.

® Registered trademark of the International Electrotechnical Commission
Marque déposée de la Commission Electrotechnique Internationale

SIST EN 62714-2:2015

CONTENTS

FOREWORD 7
INTRODUCTION 9
1 Scope 11
2 Normative references 11
3 Terms, definitions and abbreviations 11
3.1 Terms and definitions 11
3.2 Abbreviations 12
4 Conformity 12
5 AML role classes 13
5.1 Structure and references 13
5.2 AML role class library for discrete manufacturing industry – AutomationMLDMIRoleClassLib 14
5.2.1 General 14
5.2.2 RoleClass DiscManufacturingEquipment 15
5.2.3 RoleClass Transport 16
5.2.4 RoleClass Storage 16
5.2.5 RoleClass Fixture 16
5.2.6 RoleClass Gate 16
5.2.7 RoleClass Robot 17
5.2.8 RoleClass Tool 17
5.2.9 RoleClass Carrier 17
5.2.10 RoleClass Machine 17
5.2.11 RoleClass StaticObject 18
5.3 AML role class library for continuous manufacturing industry – AutomationMLCMIRoleClassLib 18
5.3.1 General 18
5.3.2 RoleClass ContManufacturingEquipment 19
5.4 AML role class library for batch manufacturing industry – AutomationMLBMIRoleClassLib 19
5.4.1 General 19
5.4.2 RoleClass BatchManufacturingEquipment 20
5.5 AML role class library for control systems – AutomationMLCSRoleClassLib 20
5.5.1 General 20
5.5.2 RoleClass ControlEquipment 21
5.5.3 RoleClass Communication 22
5.5.4 RoleClass ControlHardware 22
5.5.5 RoleClass PC 22
5.5.6 RoleClass IPC 22
5.5.7 RoleClass Handheld 22
5.5.8 RoleClass EmbeddedDevice 23
5.5.9 RoleClass Sensor 23
5.5.10 RoleClass Actuator 23
5.5.11 RoleClass Controller 23
5.5.12 RoleClass PLC 24
5.5.13 RoleClass NC 24
5.5.14 RoleClass RC 24

iTeh STANDARD PREVIEW
(standards.iteh.ai)
SIST EN 62714-2:2015
https://standards.iteh.ai/catalog/standards/sist/d76b5c67-b0eb-4aaa-86f2-1b1ec4b2b130/sist-en-62714-2-2015

SIST EN 62714-2:2015

5.5.15 RoleClass PAC 24
Annex A (informative) AML extended role class library 25
A.1 General 25
A.2 RoleClass PLCFacet 26
A.3 RoleClass HMIFacet 27
A.4 RoleClass Enterprise 27
A.5 RoleClass Site 28
A.6 RoleClass Area 28
A.7 RoleClass ProductionLine 29
A.8 RoleClass WorkCell 29
A.9 RoleClass ProcessCell 29
A.10 RoleClass Unit 30
A.11 RoleClass ProductionUnit 30
A.12 RoleClass StorageZone 30
A.13 RoleClass StorageUnit 31
A.14 RoleClass Turntable 31
A.15 RoleClass Conveyor 31
A.16 RoleClass BeltConveyor 32
A.17 RoleClass RollConveyor 32
A.18 RoleClass ChainConveyor 32
A.19 RoleClass PalletConveyor 32
A.20 RoleClass OverheadConveyor 33
A.21 RoleClass LiftingTable 33
A.22 RoleClass AGV 33
A.23 RoleClass Transposer 33
A.24 RoleClass CarrierHandlingSystem 34
A.25 RoleClass BodyStore 34
A.26 RoleClass Lift 34
A.27 RoleClass Rollerbed 34
A.28 RoleClass StationaryTool 35
A.29 RoleClass MovableTool 35
A.30 RoleClass ControlCabinet 35
A.31 RoleClass IODevice 35
A.32 RoleClass HMI 36
A.33 RoleClass WarningEquipment 36
A.34 RoleClass ActuatingDrive 36
A.35 RoleClass MotionController 36
A.36 RoleClass Panel 37
A.37 RoleClass MeasuringEquipment 37
A.38 RoleClass Clamp 37
A.39 RoleClass ProcessController 37
A.40 RoleClass Loader 38
A.41 RoleClass Unloader 38
Annex B (informative) Examples of usage of RoleClasses 39
B.1 General 39
B.2 Example plant unit 39
Annex C (informative) User-defined RoleClass libraries 44
C.1 General 44
C.2 External semantics of attributes 45

iTeh STANDARD PREVIEW
(standards.iteh.ai)
SIST EN 62714-2:2015
https://standards.iteh.ai/catalog/standards/sist/d76b5c67-b0cb-4aaa-86f2-[illegible]/sist-en-62714-2-2015

SIST EN 62714-2:2015

Annex D (informative) XML representation of AML libraries 46
D.1 AutomationMLDMIRoleClassLib 46
D.2 AutomationMLCMIRoleClassLib 46
D.3 AutomationMLBMIRoleClassLib 47
D.4 AutomationMLCSRoleClassLib 47
D.5 AutomationMLExtendedRoleClassLib 48
Bibliography 51

Figure 1 – Overview of the engineering data exchange format (AML) 9
Figure 2 – AutomationMLBaseRoleClassLib defined in IEC 62714-1:2014 13
Figure 3 – AutomationMLDMIRoleClassLib 15
Figure 4 – XML grid of the AutomationMLDMIRoleClassLib 15
Figure 5 – XML text of the AutomationMLDMIRoleClassLib 15
Figure 6 – AutomationMLCMIRoleClassLib 18
Figure 7 – XML grid of the AutomationMLCMIRoleClassLib 18
Figure 8 – XML text of the AutomationMLCMIRoleClassLib 19
Figure 9 – AutomationMLBMIRoleClassLib 19
Figure 10 – XML grid of the AutomationMLBMIRoleClassLib 19
Figure 11 – XML text of the AutomationMLBMIRoleClassLib 19
Figure 12 – AutomationMLCSRoleClassLib 20
Figure 13 – XML grid of the AutomationMLCSRoleClassLib 21
Figure 14 – XML text of the AutomationMLCSRoleClassLib 21
Figure A.1 – AutomationMLExtendedRoleClassLib 26
Figure A.2 – Resource structure [SOURCE: IEC 62264-1:2013] 28
Figure B.1 – Usage of roles in the mapping process 39
Figure B.2 – Example for usage of roles 40
Figure B.3 – Example AML model 40
Figure B.4 – Example InstanceHierarchy for usage of roles 41
Figure B.5 – XML grid of the example InstanceHierarchy for usage of roles 41
Figure B.6 – XML text of the example InstanceHierarchy for usage of roles 41
Figure B.7 – External RoleClassLib reference 42
Figure B.8 – Usage of external role class in example 42
Figure B.9 – Example SystemUnitClass library for usage of roles 43
Figure B.10 – XML grid of the example SystemUnitClass library for usage of roles 43
Figure B.11 – XML text of the example SystemUnitClass library for usage of roles 43
Figure C.1 – AML user-defined RoleClassLib FoodAndBeverage 44
Figure C.2 – Example for external attribute semantics 45

Table 1 – Abbreviations 12
Table 2 – Structure of AML role class libraries 13
Table 3 – RoleClass DiscManufacturingEquipment 16
Table 4 – RoleClass Transport 16
Table 5 – RoleClass Storage 16
Table 6 – RoleClass Fixture 16

iTeh STANDARD PREVIEW
(standards.iteh.ai)
SIST EN 62714-2:2015
https://standards.iteh.ai/catalog/standards/sist/d76b5c67-b0eb-4aaa-86f2-1b3e6ab2b130/sist-en-62714-2-2015

SIST EN 62714-2:2015

Table 7 – RoleClass Gate 17
Table 8 – RoleClass Robot 17
Table 9 – RoleClass Tool 17
Table 10 – RoleClass Carrier 17
Table 11 – RoleClass Machine 18
Table 12 – RoleClass StaticObject 18
Table 13 – RoleClass ContManufacturingEquipment 19
Table 14 – RoleClass BatchManufacturingEquipment 20
Table 15 – RoleClass ControlEquipment 21
Table 16 – RoleClass Communication 22
Table 17 – RoleClass ControlHardware 22
Table 18 – RoleClass PC 22
Table 19 – RoleClass IPC 22
Table 20 – RoleClass Handheld 23
Table 21 – RoleClass EmbeddedDevice 23
Table 22 – RoleClass Sensor 23
Table 23 – RoleClass Actuator 23
Table 24 – RoleClass Controller 23
Table 25 – RoleClass PLC 24
Table 26 – RoleClass NC 24
Table 27 – RoleClass RC 24
Table 28 – RoleClass PAC 24
Table A.1 – RoleClass PLCFacet 27
Table A.2 – RoleClass HMIFacet 27
Table A.3 – RoleClass Enterprise 27
Table A.4 – RoleClass Site 28
Table A.5 – RoleClass Area 29
Table A.6 – RoleClass ProductionLine 29
Table A.7 – RoleClass WorkCell 29
Table A.8 – RoleClass ProcessCell 30
Table A.9 – RoleClass Unit 30
Table A.10 – RoleClass ProductionUnit 30
Table A.11 – RoleClass StorageZone 31
Table A.12 – RoleClass StorageUnit 31
Table A.13 – RoleClass Turntable 31
Table A.14 – RoleClass Conveyor 32
Table A.15 – RoleClass BeltConveyor 32
Table A.16 – RoleClass RollConveyor 32
Table A.17 – RoleClass ChainConveyor 32
Table A.18 – RoleClass PalletConveyor 33
Table A.19 – RoleClass OverheadConveyor 33
Table A.20 – RoleClass LiftingTable 33
Table A.21 – RoleClass AGV 33

iTeh STANDARD PREVIEW
(standards.iteh.ai)
SIST EN 62714-2:2015
https://standards.iteh.ai/catalog/standards/sist/d76b5c67-b0eb-4aaa-86f2-b3c6ab2b130/sist-en-62714-2-2015

SIST EN 62714-2:2015

Table A.22 – RoleClass Transposer 34
Table A.23 – RoleClass CarrierHandlingSystem 34
Table A.24 – RoleClass BodyStore 34
Table A.25 – RoleClass Lift 34
Table A.26 – RoleClass Rollerbed 35
Table A.27 – RoleClass StationaryTool 35
Table A.28 – RoleClass MovableTool 35
Table A.29 – RoleClass ControlCabinet 35
Table A.30 – RoleClass IODevice 36
Table A.31 – RoleClass HMI 36
Table A.32 – RoleClass WarningEquipment 36
Table A.33 – RoleClass ActuatingDrive 36
Table A.34 – RoleClass MotionController 37
Table A.35 – RoleClass Panel 37
Table A.36 – RoleClass MeasuringEquipment 37
Table A.37 – RoleClass Clamp 37
Table A.38 – RoleClass ProcessController 38
Table A.39 – RoleClass Loader 38
Table A.40 – RoleClass Unloader 38

iTeh STANDARD PREVIEW
(standards.iteh.ai)
SIST EN 62714-2:2015
https://standards.iteh.ai/catalog/standards/sist/d76b5c67-b0eb-4aaa-86f2-1b3c6ab2b130/sist-en-62714-2-2015

SIST EN 62714-2:2015

INTERNATIONAL ELECTROTECHNICAL COMMISSION

_____

ENGINEERING DATA EXCHANGE FORMAT FOR USE IN INDUSTRIAL AUTOMATION SYSTEMS ENGINEERING – AUTOMATION MARKUP LANGUAGE –

Part 2: Role class libraries

FOREWORD

1) The International Electrotechnical Commission (IEC) is a worldwide organization for standardization comprising all national electrotechnical committees (IEC National Committees). The object of IEC is to promote international co-operation on all questions concerning standardization in the electrical and electronic fields. To this end and in addition to other activities, IEC publishes International Standards, Technical Specifications, Technical Reports, Publicly Available Specifications (PAS) and Guides (hereafter referred to as "IEC Publication(s)"). Their preparation is entrusted to technical committees; any IEC National Committee interested in the subject dealt with may participate in this preparatory work. International, governmental and non-governmental organizations liaising with the IEC also participate in this preparation. IEC collaborates closely with the International Organization for Standardization (ISO) in accordance with conditions determined by agreement between the two organizations.
2) The formal decisions or agreements of IEC on technical matters express, as nearly as possible, an international consensus of opinion on the relevant subjects since each technical committee has representation from all interested IEC National Committees.
3) IEC Publications have the form of recommendations for international use and are accepted by IEC National Committees in that sense. While all reasonable efforts are made to ensure that the technical content of IEC Publications is accurate, IEC cannot be held responsible for the way in which they are used or for any misinterpretation by any end user.
4) In order to promote international uniformity, IEC National Committees undertake to apply IEC Publications transparently to the maximum extent possible in their national and regional publications. Any divergence between any IEC Publication and the corresponding national or regional publication shall be clearly indicated in the latter.
5) IEC itself does not provide any attestation of conformity. Independent certification bodies provide conformity assessment services and, in some areas, access to IEC marks of conformity. IEC is not responsible for any services carried out by independent certification bodies.
6) All users should ensure that they have the latest edition of this publication.
7) No liability shall attach to IEC or its directors, employees, servants or agents including individual experts and members of its technical committees and IEC National Committees for any personal injury, property damage or other damage of any nature whatsoever, whether direct or indirect, or for costs (including legal fees) and expenses arising out of the publication, use of, or reliance upon, this IEC Publication or any other IEC Publications.
8) Attention is drawn to the Normative references cited in this publication. Use of the referenced publications is indispensable for the correct application of this publication.
9) Attention is drawn to the possibility that some of the elements of this IEC Publication may be the subject of patent rights. IEC shall not be held responsible for identifying any or all such patent rights.

iTeh STANDARD PREVIEW
(standards.iteh.ai)
SIST EN 62714-2:2015
https://standards.iteh.ai/catalog/standards/sist/07b05e01-b9f1-4aae-a0f2-1b3c6ab2b130/sist-en-62714-2-2015

International Standard IEC 62714-2 has been prepared by subcommittee 65E: Devices and integration in enterprise systems, of IEC technical committee 65: Industrial-process measurement, control and automation.

The text of this standard is based on the following documents:

CDV	Report on voting
65E/300/CDV	65E/390/RVC

Full information on the voting for the approval of this standard can be found in the report on voting indicated in the above table.

This publication has been drafted in accordance with the ISO/IEC Directives, Part 2.

SIST EN 62714-2:2015

A list of all parts in the IEC 62714 series, published under the general title *Engineering data exchange format for use in industrial automation systems engineering – Automation Markup Language*, can be found on the IEC website.

The committee has decided that the contents of this publication will remain unchanged until the stability date indicated on the IEC website under "http://webstore.iec.ch" in the data related to the specific publication. At this date, the publication will be

- reconfirmed,
- withdrawn,
- replaced by a revised edition, or
- amended.

IMPORTANT – The 'colour inside' logo on the cover page of this publication indicates that it contains colours which are considered to be useful for the correct understanding of its contents. Users should therefore print this document using a colour printer.

iTeh STANDARD PREVIEW
(standards.iteh.ai)
SIST EN 62714-2:2015
https://standards.iteh.ai/catalog/standards/sist/d76b5c67-b0eb-4aaa-86f2-1b3c6ab2b130/sist-en-62714-2-2015

SIST EN 62714-2:2015

INTRODUCTION

The data exchange format defined in IEC 62714 (Automation Markup Language, AML) is an XML schema based data format and has been developed in order to support the data exchange between engineering tools in a heterogeneous engineering tool landscape. IEC 62714-1 gives an overview about the format.

The goal of AML is to interconnect engineering tools from the existing heterogeneous tool landscape in their different disciplines, e.g. mechanical plant engineering, electrical design, process engineering, process control engineering, HMI development, PLC programming, robot programming, etc.

AML stores engineering information following the object oriented paradigm and allows modelling of physical and logical plant components as data objects encapsulating different aspects. An object may consist of other sub-objects and may itself be part of a larger composition or aggregation. Typical objects in plant automation comprise information on topology, geometry, kinematics and logic, whereas logic comprises sequencing, behaviour and control.

AML combines existing industry data formats that are designed for the storage and exchange of different aspects of engineering information. These data formats are used on “as-is” basis within their own specifications and are not branched for AML needs.

The core of AML is the top-level data format CAEX that connects the different data formats. Therefore, AML has an inherent distributed document architecture.

iTeh STANDARD PREVIEW
(standards.iteh.ai)

Figure 1 illustrates the basic AML architecture and the distribution of topology, geometry, kinematic and logic information.

SIST EN 62714-2:2015
https://standards.iteh.ai/catalog/standards/sist/d76b5c67-b0eb-4aaa-86f2-1b3e6db2b139/sist-en-62714-2-2015

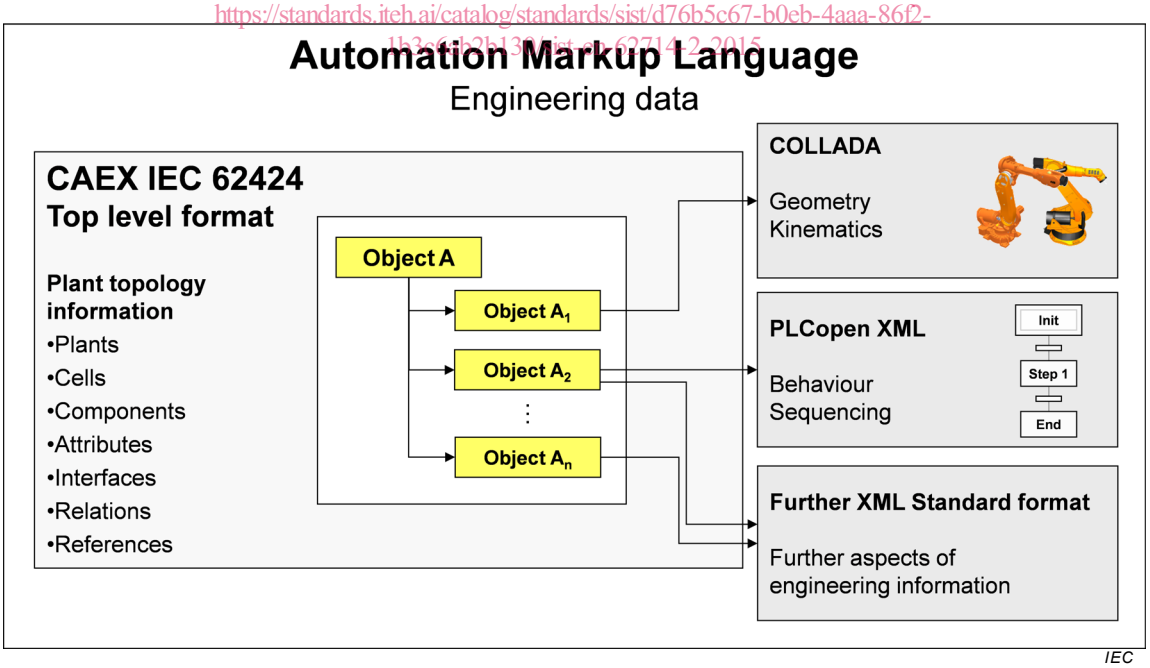

Figure 1 – Overview of the engineering data exchange format (AML)

Due to the different aspects of AML, IEC 62714 consists of different parts focussing on different aspects.

- IEC 62714-1: Architecture and general requirements