SLOVENSKI STANDARD
SIST EN 62196-2:2012/A12:2014

01-november-2014

Vtiči, vtičnice, konektorji in uvodnice na vozilih - Kabelsko napajanje električnih vozil - 2. del: Zahteve za dimenzijsko skladnost in zamenljivost pribora s trni in cevastimi kontakti za izmenični tok (a.c.)

Plugs, socket-outlets, vehicle connectors and vehicle inlets - Conductive charging of electric vehicles -- Part 2: Dimensional compatibility and interchangeability requirements for a.c. pin and contact-tube accessories

Stecker, Steckdosen, Fahrzeugkupplungen und Fahrzeugstecker - Konduktives Laden von Elektrofahrzeugen -- Teil 2: Anforderungen und Hauptmaße für die Kompatibilität und Austauschbarkeit von Stift- und Buchsensteckvorrichtungen für Wechselstrom

Fiches, socles de prise de courant, prises mobiles et socles de connecteurs de véhicule - Charge conductive des véhicules électriques -- Partie 2: Exigences dimensionnelles de compatibilité et d'interchangeabilité pour les appareils à broches et alvéoles pour courant alternatif

Ta slovenski standard je istoveten z: EN 62196-2:2012/A12:2014

ICS:

29.120.30	Vtiči, vtičnice, spojke	Plugs, socket-outlets, couplers
43.120	Električna cestna vozila	Electric road vehicles

SIST EN 62196-2:2012/A12:2014 en,fr,de

EUROPEAN STANDARD

NORME EUROPÉENNE

EUROPÄISCHE NORM

EN 62196-2:2012/A12

August 2014

ICS 29.120.30; 43.120

English Version

Plugs, socket-outlets, vehicle connectors and vehicle inlets - Conductive charging of electric vehicles - Part 2: Dimensional compatibility and interchangeability requirements for a.c. pin and contact-tube accessories

Fiches, socles de prise de courant, prises mobiles et socles de connecteurs de véhicule - Charge conductive des véhicules électriques - Partie 2: Exigences dimensionnelles de compatibilité et d'interchangeabilité pour les appareils à broches et alvéoles pour courant alternatif

Stecker, Steckdosen, Fahrzeugkupplungen und Fahrzeugstecker - Konduktives Laden von Elektrofahrzeugen - Teil 2: Anforderungen und Hauptmaße für die Kompatibilität und Austauschbarkeit von Stift- und Buchsensteckvorrichtungen für Wechselstrom

This amendment A12 modifies the European Standard EN 62196-2:2012; it was approved by CENELEC on 2014-06-16. CENELEC members are bound to comply with the CEN/CENELEC Internal Regulations which stipulate the conditions for giving this amendment the status of a national standard without any alteration.

Up-to-date lists and bibliographical references concerning such national standards may be obtained on application to the CEN-CENELEC Management Centre or to any CENELEC member.

This amendment exists in three official versions (English, French, German). A version in any other language made by translation under the responsibility of a CENELEC member into its own language and notified to the CEN-CENELEC Management Centre has the same status as the official versions.

CENELEC members are the national electrotechnical committees of Austria, Belgium, Bulgaria, Croatia, Cyprus, the Czech Republic, Denmark, Estonia, Finland, Former Yugoslav Republic of Macedonia, France, Germany, Greece, Hungary, Iceland, Ireland, Italy, Latvia, Lithuania, Luxembourg, Malta, the Netherlands, Norway, Poland, Portugal, Romania, Slovakia, Slovenia, Spain, Sweden, Switzerland, Turkey and the United Kingdom.

European Committee for Electrotechnical Standardization
Comité Européen de Normalisation Electrotechnique
Europäisches Komitee für Elektrotechnische Normung

CEN-CENELEC Management Centre: Avenue Marnix 17, B-1000 Brussels

Ref. No. EN 62196-2:2012/A12:2014 E

Foreword

This document (EN 62196-2:2012/A12:2014) has been prepared by CLC/TC 23BX "Switches, boxes and enclosures for household and similar purposes, plugs and socket outlets for d.c. and for the charging of electrical vehicles including their connectors".

The following dates are fixed:

- latest date by which this document has to be implemented at national level by publication of an identical national standard or by endorsement (dop) 2015-06-16
- latest date by which the national standards conflicting with this document have to be withdrawn (dow) 2017-06-16

This standard covers the Principle Elements of the Safety Objectives for Electrical Equipment Designed for Use within Certain Voltage Limits (LVD - 2006/95/EC).

Attention is drawn to the possibility that some of the elements of this document may be the subject of patent rights. CENELEC [and/or CEN] shall not be held responsible for identifying any or all such patent rights.

STANDARD SHEETS

Replace STANDARD SHEET 2-IIa (Sheet 1) and STANDARD SHEET 2-IIa (Sheet 2) by:

Replace Standard Sheet 2-IIIa, Sheet 2 by:

STANDARD SHEET 2-IIa (Sheet 1)

SOCKET-OUTLET NOT EXCEEDING 480 V, 63 A THREE-PHASE OR 70 A SINGLE PHASE

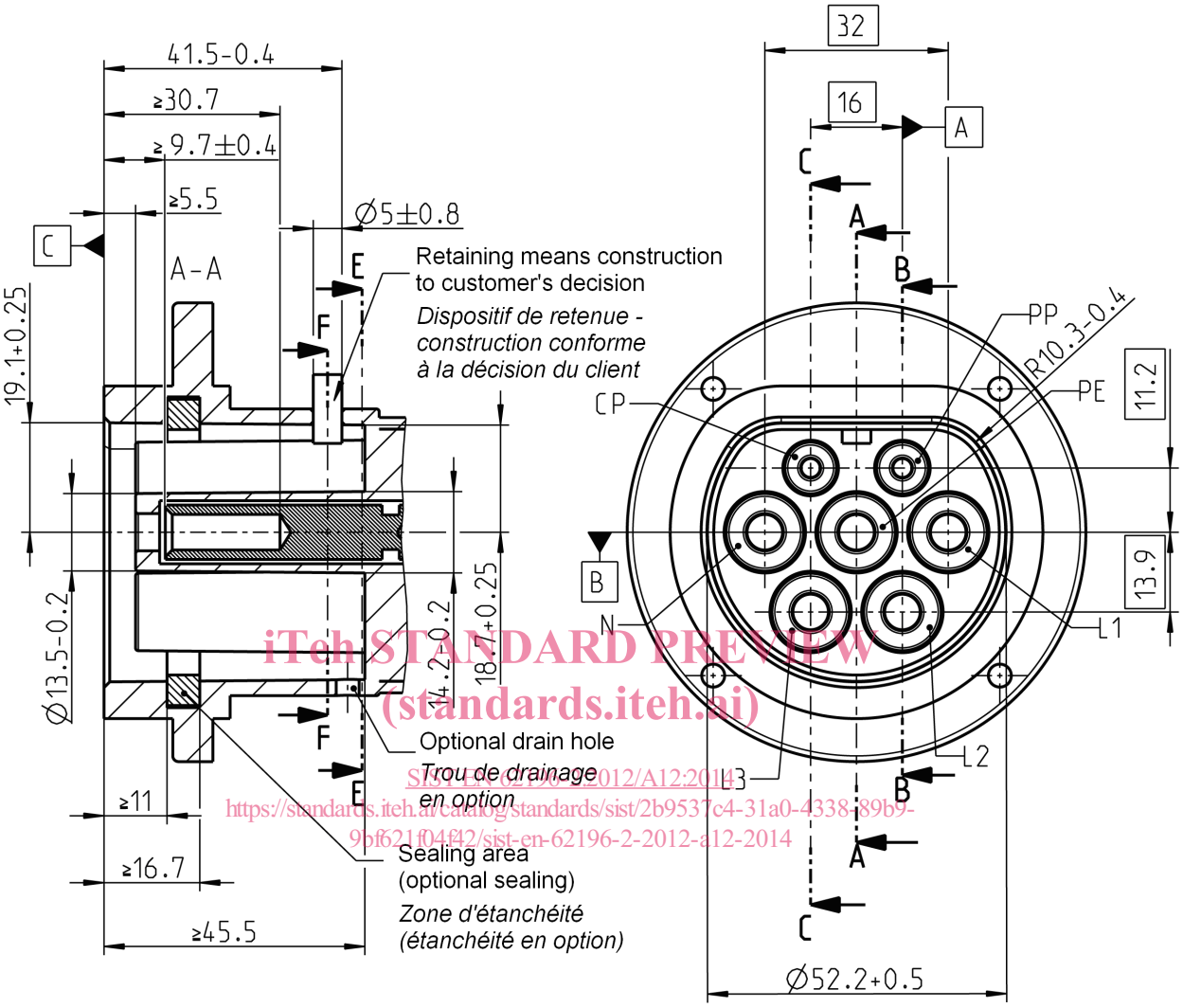

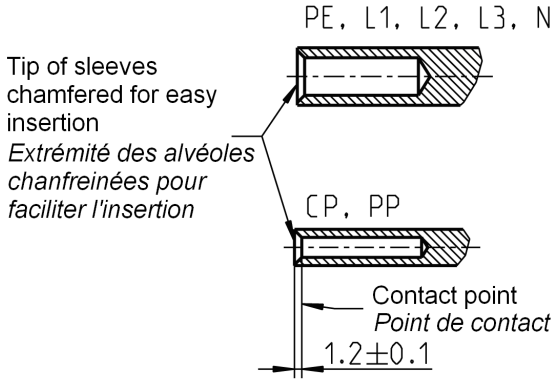

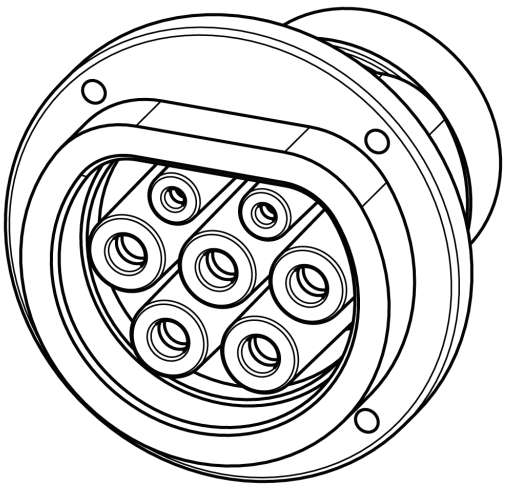

UNDIMENSIONNED RADII: R0,5-0,7
RAYONS NON DIMENSIONNES

STANDARD SHEET 2-IIa (Sheet 2)

(continuation of Sheet 1)

SOCKET-OUTLET NOT EXCEEDING 480 V, 63 A THREE-PHASE OR 70 A SINGLE PHASE

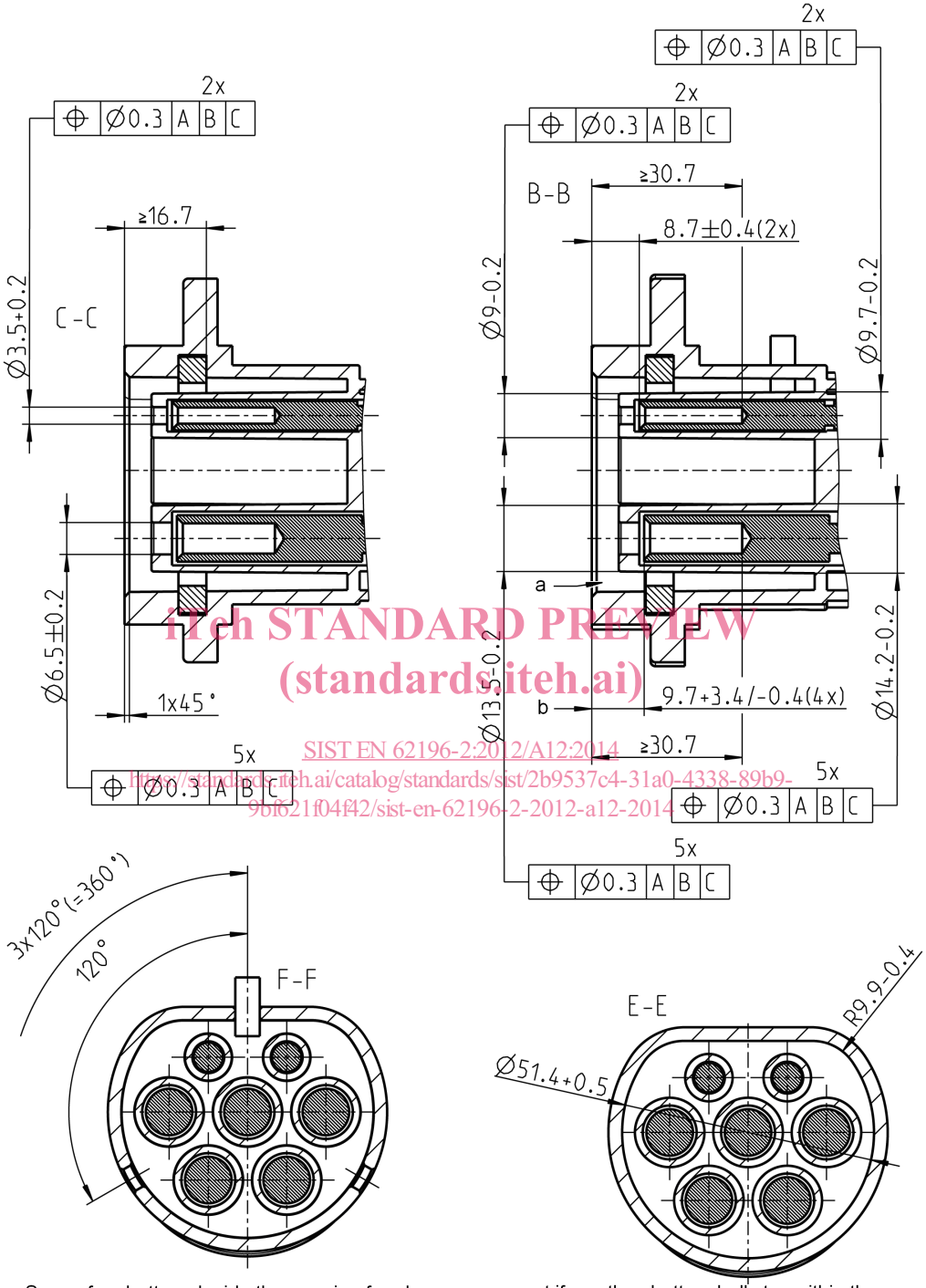

a Space for shutters. Inside the opening for plug engagement if any the shutter shall stay within the dimension 9,7+3,4/-0,4 outside the opening there is no limitation.

b Distance between the front surface of the socket and the contact tubes. This distance must be between 9,3 and 13,1

UNDIMENSIONNED RADII. R0,5-0,7
RAYONS NON DIMENSIONNES

STANDARD SHEET 2-IIIa (Sheet 2)

(continuation of Sheet 1)

SOCKET-OUTLET NOT EXCEEDING 250 V, 16 A SINGLE PHASE WITH 1 PILOT CONTACT

Dimensions in millimetres

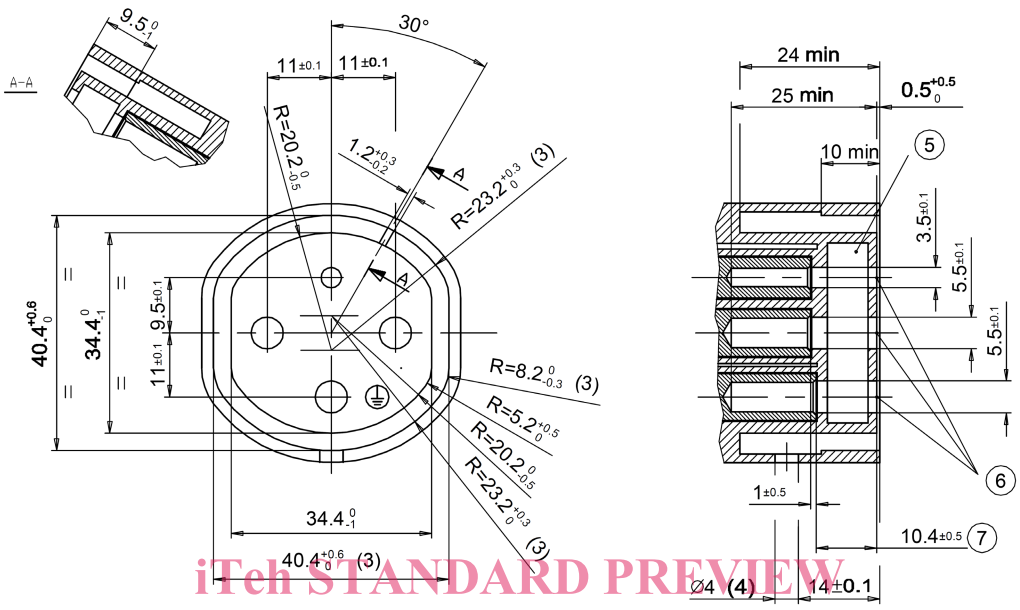

Holes or recesses in the front face, if any, other than those for contact tubes, shall not have a depth of more than 10 mm.

Arrangement of contact tubes

Front view of contact tubes of socket-outlet

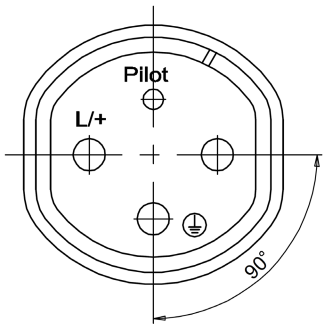

(1) The dimensions refers to the pins; the contact tubes need not to be circular

(2) The bevelling of the contact tubes may be well rounded off towards the internal cylindrical surface within a distance of 1 1/2 times the indicate values.

(3) The indicated dimension shall be within the prescribed limits at least 10mm. Beyond this, they may be larger but not smaller.

(4) This opening may be a hole with 4mm diametre minimum or a slot 4mm minimum with

(5) Space for optional shutters. If any, they are compulsory for phase and neutral contact tubes.

(6) Entry pins holes shall be rounded off or bevelled.

(7) This dimension is measured from the extremity of the contact tube.

End of contact tubes

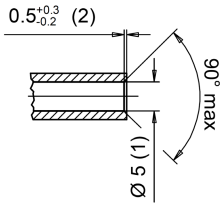

Earth / phases / neutral

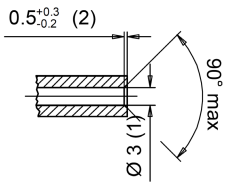

Pilot