SLOVENSKI STANDARD
SIST EN 3155-029:2009

01-februar-2009

Aeronavtika - Elektriļ ni kontakti za uporabo v veznih elementih - 029. del: Kontakti, elektriļ ni, koaksialni, oklopljeni, velikost 16, ǵenski, tip D, nagubani, razred R - Standard za proizvod

Aerospace series - Electrical contacts used in elements of connection - Part 029: Contacts, electrical, coaxial, shielded, size 16, female, type D, crimp, class R - Product standard

Luft- und Raumfahrt - Elektrische Kontakte zur Verwendung in Verbindungselementen - Teil 029: Elektrische koaxiale Buchsenkontakte, geschirmt, Gröbe 16, Typ D, crimpbar, Klasse R - Produktnorm

Série aérospatiale - Contacts électriques utilisés dans les organes de connexion - Partie 029 : Contacts éléctriques coaxiaux, blindés, taille 16, femelles, type D, à sertir, classe R - Norme de produit

Ta slovenski standard je istoveten z: EN 3155-029:2007

ICS:

49.060	Letalska in vesoljska elektriļ na oprema in sistemi	Aerospace electric equipment and systems

SIST EN 3155-029:2009 **en**

EUROPEAN STANDARD

NORME EUROPÉENNE

EUROPÄISCHE NORM

EN 3155-029

April 2007

ICS 49.060

English Version

Aerospace series - Electrical contacts used in elements of connection - Part 029: Contacts, electrical, coaxial, shielded, size 16, female, type D, crimp, class R - Product standard

Série aérospatiale - Contacts électriques utilisés dans les organes de connexion - Partie 029 : Contacts éléctriques coaxiaux, blindés, taille 16, femelles, type D, à sertir, classe R - Norme de produit

Luft- und Raumfahrt - Elektrische Kontakte zur Verwendung in Verbindungselementen - Teil 029: Elektrische koaxiale Buchsenkontakte, geschirmt, Gröbe 16, Typ D, crimpbar, Klasse R - Produktnorm

This European Standard was approved by CEN on 6 January 2006.

CEN members are bound to comply with the CEN/CENELEC Internal Regulations which stipulate the conditions for giving this European Standard the status of a national standard without any alteration. Up-to-date lists and bibliographical references concerning such national standards may be obtained on application to the CEN Management Centre or to any CEN member.

This European Standard exists in three official versions (English, French, German). A version in any other language made by translation under the responsibility of a CEN member into its own language and notified to the CEN Management Centre has the same status as the official versions.

CEN members are the national standards bodies of Austria, Belgium, Bulgaria, Cyprus, Czech Republic, Denmark, Estonia, Finland, France, Germany, Greece, Hungary, Iceland, Ireland, Italy, Latvia, Lithuania, Luxembourg, Malta, Netherlands, Norway, Poland, Portugal, Romania, Slovakia, Slovenia, Spain, Sweden, Switzerland and United Kingdom.

EUROPEAN COMMITTEE FOR STANDARDIZATION
COMITÉ EUROPÉEN DE NORMALISATION
EUROPÄISCHES KOMITEE FÜR NORMUNG

Management Centre: rue de Stassart, 36 B-1050 Brussels

Ref. No. EN 3155-029:2007: E

Contents

Page

Foreword 3

1 Scope 4

2 Normative references 4

3 Terms and definitions 5

4 Required characteristics 5
4.1 Specific characteristics 5
4.2 Dimensions and mass 5
4.3 Marking by colour code 6
4.4 Material, surface treatment 6
4.5 Permissible cables 6
4.6 Tooling 7
4.6.1 Crimping tools 7
4.6.2 The contact insertion/extraction tools 7
4.7 Stripping 7
4.8 Tests 9
4.9 Gauge 11

5 Designation 12

6 Marking 12

7 Delivery conditions 12

8 Technical specification 12

Foreword

This document (EN 3155-029:2007) has been prepared by the European Association of Aerospace Manufacturers - Standardization (AECMA-STAN).

After enquiries and votes carried out in accordance with the rules of this Association, this Standard has received the approval of the National Associations and the Official Services of the member countries of AECMA, prior to its presentation to CEN.

This European Standard shall be given the status of a national standard, either by publication of an identical text or by endorsement, at the latest by October 2007, and conflicting national standards shall be withdrawn at the latest by October 2007.

Attention is drawn to the possibility that some of the elements of this document may be the subject of patent rights. CEN [and/or CENELEC] shall not be held responsible for identifying any or all such patent rights.

According to the CEN/CENELEC Internal Regulations, the national standards organizations of the following countries are bound to implement this European Standard: Austria, Belgium, Bulgaria, Cyprus, Czech Republic, Denmark, Estonia, Finland, France, Germany, Greece, Hungary, Iceland, Ireland, Italy, Latvia, Lithuania, Luxembourg, Malta, Netherlands, Norway, Poland, Portugal, Romania, Slovakia, Slovenia, Spain, Sweden, Switzerland and the United Kingdom.

1 Scope

This standard specifies the required characteristics, tests and tooling applicable to female electrical coaxial contacts, shielded, size 16, type D, crimp, class R, used in elements of connection according to EN 3155-002.

It shall be used together with EN 3155-001.

The associated male contacts are defined in EN 3155-028 and EN 3155-038.

2 Normative references

The following referenced documents are indispensable for the application of this document. For dated references, only the edition cited applies. For undated references, the latest edition of the referenced document (including any amendments) applies.

EN 2083, *Aerospace series — Copper or copper alloy conductors for electrical cables — Product standard.*

EN 2591*, *Aerospace series — Elements of electrical and optical connection — Test methods*.

EN 3155-001, *Aerospace series — Electrical contacts used in elements of connection — Part 001: Technical specification.* 1)

EN 3155-002, *Aerospace series — Electrical contacts used in elements of connection — Part 002: List and utilization of contacts.*

EN 3155-028, *Aerospace series — Electrical contacts used in elements of connection — Part 028: Contacts, electrical, coaxial, shielded, size 16, male, type D, crimp, class R — Product standard.*

EN 3155-038, *Aerospace series — Electrical contacts used in elements of connection — Part 038: Contacts, electrical, coaxial, size 16, male, type D, solder, class R — Product standard.* 2)

EN 3682-001, *Aerospace series — Connectors, plug and receptacle, electrical, rectangular, interchangeable insert type, rack to panel, operating temperature 150 °C continuous — Part 001: Technical specification.*

EN 4008-015, *Aerospace series — Elements of electrical and optical connection — Crimping tools and associated accessories — Part 015: Positioner for crimping tool M22520/2-01 — Product standard.* 1)

EN 4008-017, *Aerospace series — Elements of electrical and optical connection — Crimping tools and associated accessories — Part 017: Positioner for crimping tool M22520/4-01 — Product standard.* 1)

MIL-DTL-22520, *Crimping tools, wire termination, general specification for.* 3)

MIL-I-81969, *Installing and removal tools, connector electrical contact, general specification for.* 3)

TR 6058, *Aerospace series — Cable code identification list.* 4)

---

* All parts quoted in this standard.

1) Published as AECMA Prestandard at the date of publication of this standard.

2) In preparation at the date of publication of this standard.

3) Published by: Department of Defense (DOD), The Pentagon, Washington D.C. 20301, USA.

4) Published as AECMA Technical Report at the date of publication of this standard.

3 Terms and definitions

For the purposes of this standard, the terms and definitions given in EN 3155-001 apply.

4 Required characteristics

4.1 Specific characteristics

Type D contacts are contacts with screening feature, class R corresponds to an operating temperature range from – 65°C to 150 °C.

4.2 Dimensions and mass

See Figure 1.

Dimensions and tolerances are given in millimetres and apply after surface treatment.

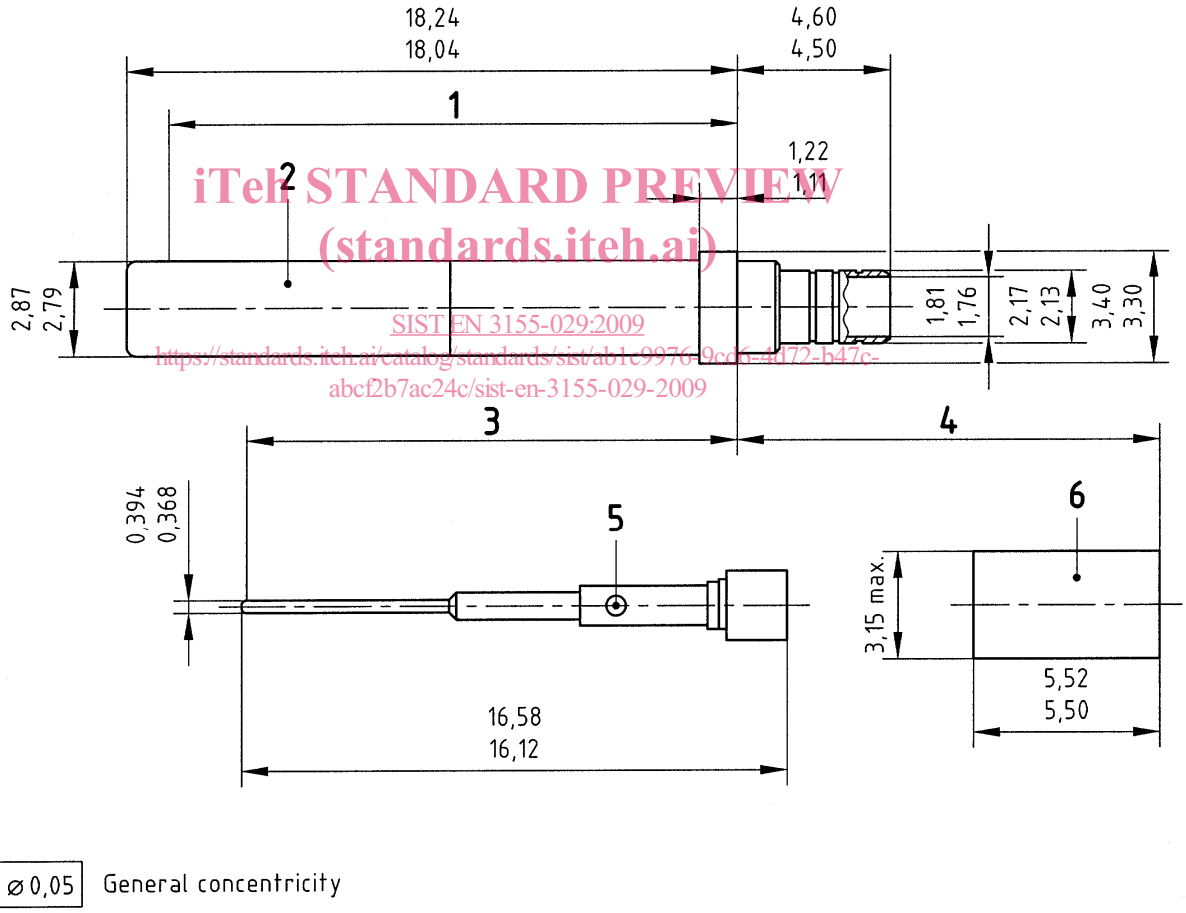

Key

1 Electrical point of contact = 16,8 min
2 Outer contact
3 Electrical point of contact 14,50 min
4 8 max after crimping
5 Central contact
6 Crimping ferrule

Figure 1

4.3 Marking by colour code

Not applicable

4.4 Material, surface treatment

— Outer body material (female) : copper alloy

— Centre contact (male) : copper alloy

— Crimp ferrule : copper alloy

— Surface treatment : gold on appropriate undercoat, thickness of protection not specified, selective protection permitted

— Hood : stainless steel

— Dielectric : PTFE or equivalent

4.5 Permissible cables

See Figure 2 and Table 1.

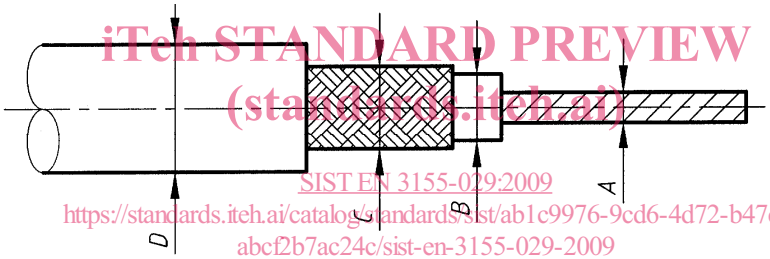

Figure 2

Table 1

Cable group	Cable code according to TR 6058	Dimensions of cable							
		A		*B*		*C*		*D*	
		min.	max.	min.	max.	min.	max.	min.	max.
A	WK and WS	0,48	0,53	1,44	1,60	2,17	2,45	2,33	2,66
B	XY	0,28	0,33	1,52	1,68	–	2,14	2,41	2,67
C	WL	0,28	0,33	1,20	1,30	–	2,00	2,10	2,35
D	WG	0,28	0,33	0,79	0,89	–	1,37	1,70	1,90
NOTE Cables in this table are not a definitive range, but the cable group(s) used for qualification must be stated in the qualification test report.									

4.6 Tooling

4.6.1 Crimping tools

Conform to MIL-DTL-22520G, see Table 2.

The qualification selector numbers used for crimping copper or copper alloy conductors in electrical cables EN 2083 cables are indicated in Table 2.

It is the responsibility of the user if the parameters in Tables 1 and 2 are changed for service use.

Table 2

Cable code	Tooling for crimping of centre contact			Tooling for crimping of contact outer body		
	Crimping tool	Positioner	Selector	Crimping tool	Positioner	Selector
WK, WL and **WS**	M22520/2C-01	EN 4008-015	2	M22520/4A-01	EN 4008-017	–
XY, WG and **WS**	M22520/2C-01		1	M22520/4A-01		–

4.6.2 The contact insertion/extraction tools

Conform to MIL-I-81969: insertion/extraction tool: M81969/1A-03

4.7 Stripping

Cable group codes WK, WS, XY and WL

a) Strip the cable as shown on Figure 3 with:

X = 5 mm to 5,50 mm

Y = 3,75 mm to 4,25 mm

Z = 3 mm max.

b) Slide ferrule over cable sheath.

Fold back the inner braid on cable sheath.

Cut high immunity ribbon on 3 mm strip off length.

Slide centre contact over the centre conductor until it butts against the dielectric.

Crimp centre contact using tools described in Table 2.

c) Push centre contact assembly into contact outer body.

Fold braid over barrel.

Slide ferrule to 0,50 mm min. of crimp barrel shoulder.

Crimp the ferrule once by using the tools described in Table 2.

Rotate the contact of about 45°.

Crimp the ferrule a second time by using the tools described in Table 2.