SLOVENSKI STANDARD
SIST EN 4496:2006

01-september-2006

Aeronavtika – Vijaki, 100° ugrezna glava, križna zareza, polno steblo, ozka toleranca, kratek navoj, iz titanove zlitine, anodizirani, z aluminijem pigmentiranim premazom – Klasifikacija: 1 100 MPa (pri temperaturi okolice) / 315 °C

Aerospace series - Screws, 100° countersunk normal head, offset cruciform recess, close tolerance normal shank, short thread, in titanium alloy, anodized, with aluminium pigmented coating - Classification: 1 100 MPa (at ambient temperature) / 315 °C

Luft- und Raumfahrt - 100° -Senk-Passschrauben mit Flügelkreuzschlitz, kurzes Gewinde aus Titanlegierung, anodisiert, mit aluminiumpigmentierter Beschichtung - Klasse: 1 100 MPa (bei Raumtemperatur)/315 °C

Série aérospatiale - Vis a tete fraisée 100° normale, a empreinte cruciforme déportée, fut normal a tolérance serrée, filetage court, en alliage de titane, anodisées, avec revetement alumino-organique - Classification : 1 100 MPa (a température ambiante) / 315 °C

Ta slovenski standard je istoveten z: EN 4496:2005

ICS:

49.025.20	Aluminij	Aluminium
49.025.30	Titan	Titanium
49.030.20	Sorniki, vijaki, stebelni vijaki	Bolts, screws, studs

SIST EN 4496:2006 en

EUROPEAN STANDARD

NORME EUROPÉENNE

EUROPÄISCHE NORM

EN 4496

December 2005

ICS 49.030.20

English Version

Aerospace series - Screws, 100° countersunk normal head, offset cruciform recess, close tolerance normal shank, short thread, in titanium alloy, anodized, with aluminium pigmented coating - Classification: 1 100 MPa (at ambient temperature) / 315 °C

Série aérospatiale - Vis à tête fraisée 100° normale, à empreinte cruciforme déportée, fût normal à tolérance serrée, filetage court, en alliage de titane, anodisées, avec revêtement alumino-organique - Classification : 1 100 MPa (à température ambiante) / 315 °C

Luft- und Raumfahrt – 100° Senk-Paßschrauben, mit Flügelkreuzschlitz, kurzes Gewinde, aus Titanlegierung, anodisiert, mit Aluminium pigmenttete Beschichtung - Klasse: 1 100 MPa (bei Raumtemperatur) / 315 °C

This European Standard was approved by CEN on 26 October 2005.

CEN members are bound to comply with the CEN/CENELEC Internal Regulations which stipulate the conditions for giving this European Standard the status of a national standard without any alteration. Up-to-date lists and bibliographical references concerning such national standards may be obtained on application to the Central Secretariat or to any CEN member.

This European Standard exists in three official versions (English, French, German). A version in any other language made by translation under the responsibility of a CEN member into its own language and notified to the Central Secretariat has the same status as the official versions.

CEN members are the national standards bodies of Austria, Belgium, Cyprus, Czech Republic, Denmark, Estonia, Finland, France, Germany, Greece, Hungary, Iceland, Ireland, Italy, Latvia, Lithuania, Luxembourg, Malta, Netherlands, Norway, Poland, Portugal, Slovakia, Slovenia, Spain, Sweden, Switzerland and United Kingdom.

EUROPEAN COMMITTEE FOR STANDARDIZATION
COMITÉ EUROPÉEN DE NORMALISATION
EUROPÄISCHES KOMITEE FÜR NORMUNG

Management Centre: rue de Stassart, 36 B-1050 Brussels

Ref. No. EN 4496:2005: E

Contents

Page

Foreword

This European Standard (EN 4496:2005) has been prepared by the European Association of Aerospace Manufacturers - Standardization (AECMA-STAN).

After enquiries and votes carried out in accordance with the rules of this Association, this Standard has received the approval of the National Associations and the Official Services of the member countries of AECMA, prior to its presentation to CEN.

This European Standard shall be given the status of a national standard, either by publication of an identical text or by endorsement, at the latest by June 2006, and conflicting national standards shall be withdrawn at the latest by June 2006.

Attention is drawn to the possibility that some of the elements of this document may be the subject of patent rights. CEN [and/or CENELEC] shall not be held responsible for identifying any or all such patent rights.

According to the CEN/CENELEC Internal Regulations, the national standards organizations of the following countries are bound to implement this European Standard: Austria, Belgium, Cyprus, Czech Republic, Denmark, Estonia, Finland, France, Germany, Greece, Hungary, Iceland, Ireland, Italy, Latvia, Lithuania, Luxembourg, Malta, Netherlands, Norway, Poland, Portugal, Slovakia, Slovenia, Spain, Sweden, Switzerland and the United Kingdom.

1 Scope

This standard specifies the characteristics of screws, 100° countersunk normal head, offset cruciform recess, close tolerance normal shank, short thread, in titanium alloy, anodized, with aluminium pigmented coating.

Classification: 1 100 MPa [1] / 315 °C [2]

2 Normative references

The following referenced documents are indispensable for the application of this document. For dated references, only the edition cited applies. For undated references, the latest edition of the referenced document (including any amendments) applies.

ISO 3353-1, *Aerospace — Lead and runout threads — Part 1: Rolled external threads.*

ISO 5855-2, *Aerospace — MJ threads — Part 2: Limit dimensions for bolts and nuts.*

ISO 5856, *Aerospace — Screws, 100° normal countersunk head, internal offset cruciform ribbed drive, normal shank, short or medium length MJ threads, metallic material, coated or uncoated, strength classes less than or equal to 1 100 MPa — Dimensions.*

ISO 7913, *Aerospace — Bolts and screws, metric — Tolerances of form and position.*

ISO 7994, *Aerospace — Internal drive, offset cruciform recess (Torq-Set®) for rotary fastening devices — Metric series.*

ISO 9152, *Aerospace — Bolts, with MJ threads, in titanium alloys, strength class 1 100 MPa — Procurement specification.*

EN 2424, *Aerospace series — Marking of aerospace products.*

EN 4016, *Aerospace series — Oversized bolts.*[3]

EN 4474, *Aerospace series — Aluminium pigmented coatings — Coating methods.*[3]

EN 9100, *Aerospace series — Quality management systems — Requirements (based on ISO 9001:2000) and Quality systems — Model for quality assurance in design, development, production, installation and servicing (based on ISO 9001:1994).*

EN 9133, *Aerospace series — Quality management systems — Qualification Procedure for aerospace standard parts.*

MIL-L-87132B, *Lubricant, Cetyl Alcohol, 1-Hexadecanol, Application to Fasteners.*[4]

TR 3775, *Aerospace series — Bolts and pins — Materials.*[5]

---

1) Minimum tensile strength of the material at ambient temperature

2) Maximum temperature that the screw can withstand without continuous change in its original characteristics, after return to ambient temperature. The maximum temperature is determined by the coating.

3) Published as AECMA Prestandard at the date of publication of this standard.

4) Published by: Department of Defense (DoD), the Pentagon, Washington, D.C.20301, USA.

5) Published as AECMA Technical Report at the date of publication of this standard.

3 Required characteristics

3.1 Configuration – Dimensions – Masses

See Figure 1 and Table 1.

Dimensions and tolerances are: in conformity with ISO 5856, expressed in millimetres and apply after coating (tolerance on shank diameter before coating is also specified).

Details of form not stated are left to the manufacturer's discretion.

3.2 Tolerances of form and position

See ISO 7913

3.3 Materials

See TR 3775 (titanium alloy, strength class 1 100 MPa)

3.4 Surface treatments

See EN 4474

Lubrication with cetylic alcohol (chlorine free) according to MIL-L-87132

3,2 [0,8] Values in micrometres apply prior to surface treatment.

Break sharp edges 0,1 to 0,4.

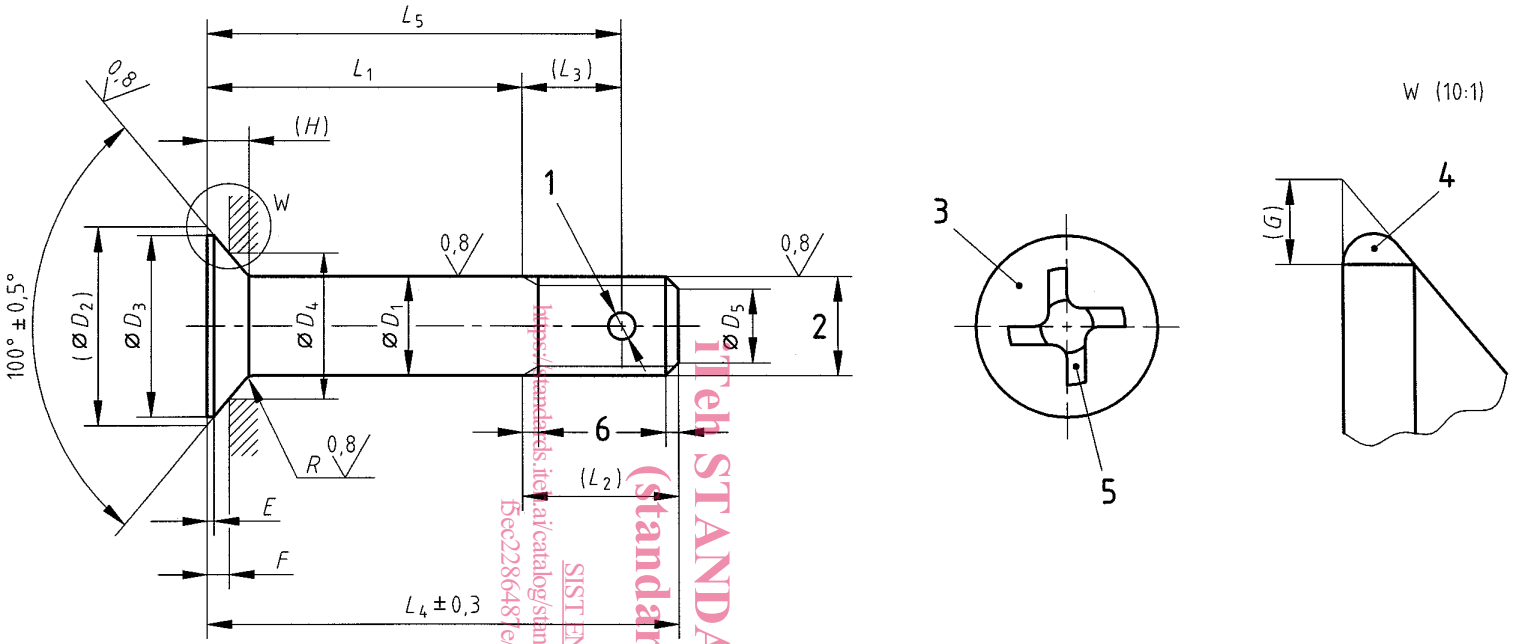

Key

1 One hole diameter D_6 (optional)
2 Thread
3 Marking
4 Blended convex form permitted
5 Drive: see Table 3.
6 Conforms to ISO 3353-1

Figure 1

Table 1

Diameter code	Thread [a]	D_1 nom.	D_1 Tol. before coating	D_1 Tol. after coating	D_2 max.	D_3 min.	D_4	D_5 nom.	D_5 Tol.	D_6 H13	E min.	F 0 – 0,08	G	H	$L_1 \pm 0,2$ [b c] Code	$L_1 \pm 0,2$ [b c] nom.	L_2	L_3	R nom.	R Tol.	Mass [d] e	Mass [d] f
030	MJ3×0,5-4h6h	3	– 0,026 – 0,041	– 0,006 – 0,031	6	5,4	4,5	2,3	0 – 0,5	–	0,06	0,63	0,3	1,27	003 to 030	3 to 30	6	–	0,4	0 – 0,2	0,31	0,03
040	MJ4×0,7-4h6h	4	– 0,030 – 0,045	– 0,010 – 0,035	8	7,2	5,78	3		1,1	0,08	0,93	0,4	1,69	003 to 040	3 to 40	7,5	5			0,64	0,06
050	MJ5×0,8-4h6h	5			10	9	7,71	3,4	± 0,5	1,5	0,1	0,96	0,5	2,12	004 to 050	4 to 50	9	6	0,5		1,26	0,09
060	MJ6×1-4h6h	6			12	10,8	9	4,2				1,26	0,6	2,54	005 to 060	5 to 60	10	7	0,7		2,12	0,13
070	MJ7×1-4h6h	7	– 0,033 – 0,048	– 0,013 – 0,038	14	12,8	10,28	5,2		1,9		1,57		2,96	006 to 070	6 to 70	11				3,32	0,17
080	MJ8×1-4h6h	8			16	14,8	12,21	6,2				1,6		3,39	006 to 080	6 to 80	11,5	7,5			4,39	0,23
100	MJ10×1,25-4h6h	10			20	18,8	15,43	7,9		2,4		1,93		4,23	008 to 100	8 to 100	14,5	9	0,8		9,23	0,34
120	MJ12×1,25-4h6h	12	– 0,036 – 0,051	– 0,016 – 0,041	24	22,8	18	9,8				2,53		5,08	010 to 120	10 to 120	16	10	0,9	0 – 0,3	15,68	0,51
140	MJ14×1,5-4h6h	14			28	26,8	20,57	11,5		3		3,14		5,93	010 to 140	10 to 140	19	12	1,1		23,26	0,68
160	MJ16×1,5-4h6h	16			32	30,8	24,43	13,5				3,2		6,77	010 to 160	10 to 160	20,5	12,5			33,63	0,91
180	MJ18×1,5-4h6h	18			36	34,8	25,71	15,5		3,8		4,35		7,62	011 to 180	11 to 180	22,5	14,5	1,3		47,37	1,14
200	MJ20×1,5-4h6h	20	– 0,040 – 0,055	– 0,020 – 0,045	40	38,8	28,92	17,5				4,68		8,47	012 to 200	12 to 200	24,5	15			64,41	1,40

a In accordance with ISO 5855-2, except the thread major diameter "d max." which shall be equal to D_1 min. – 0,025.

b Increments:

1 for $L_1 \leq 30$
2 for $30 < L_1 \leq 100$
4 for $L_1 > 100$

c If greater lengths are required, they shall be chosen using the above increments. The length code corresponds to length L_1, completed by one or two zeros to the left, where necessary, to obtain a three digit code.

d Approximate values (kg/1 000 pieces), calculated on the basis of 4,45 kg/dm^3, for information purposes only. They apply to screws without holes.

e Value for first L_4

f Increase for each additional millimetre of L_4.