SLOVENSKI STANDARD
SIST EN 4501:2009

01-maj-2009

Aeronavtika - Sorniki, normalna šestroba glava, ozka toleranca, kratek navoj, iz titanove zlitine, anodizirani, z aluminijem pigmentiranim premazom, metrska serija - Klasifikacija: 1100 MPa (pri temperaturi okolice)/315 °C

Aerospace series - Bolts, normal hexagonal head, close tolerance normal shank, short thread, in titanium alloy, anodized, with aluminium pigmented coating, metric series - Classification: 1 100 MPa (at ambient temperature) / 315 °C

Luft- und Raumfahrt - Sechskant-Passschrauben, kleiner Kopf, kurzes Gewinde, aus Titanlegierung, anodisiert, mit Aluminium pigmentierter Beschichtung, metrische Reihe - Klasse: 1 100 MPa (bei Raumtemperatur) / 315 °C

Série aérospatiale - Axes à tête hexagonale basse, fût à tolérance serrée, filetage court, en alliage de titane, anodisées, avec revêtement alumino-organique, série métrique - Classification : 1 100 MPa (à température ambiante) / 315 °C

Ta slovenski standard je istoveten z: EN 4501:2006

ICS:

49.025.20	Aluminij	Aluminium
49.025.30	Titan	Titanium
49.030.20	Sorniki, vijaki, stebelni vijaki	Bolts, screws, studs

SIST EN 4501:2009 en,de

EUROPEAN STANDARD

NORME EUROPÉENNE

EUROPÄISCHE NORM

EN 4501

June 2006

ICS 49.030.20

English Version

Aerospace series - Bolts, normal hexagonal head, close tolerance normal shank, short thread, in titanium alloy, anodized, with aluminium pigmented coating, metric series - Classification: 1 100 MPa (at ambient temperature) / 315 °C

Série aérospatiale - Axes à tête hexagonale basse, fût à tolérance serrée, filetage court, en alliage de titane, anodisées, avec revêtement alumino-organique, série métrique - Classification : 1 100 MPa (à température ambiante) / 315 °C

Luft- und Raumfahrt - Sechskant-Paßschrauben, kleiner Kopf, kurzes Gewinde, aus Titanlegierung, anodisiert, mit Aluminium pigmenttete Beschichtung, metrische Reihe - Klasse: 1 100 MPa (bei Raumtemperatur) / 315 °C

This European Standard was approved by CEN on 13 January 2006.

CEN members are bound to comply with the CEN/CENELEC Internal Regulations which stipulate the conditions for giving this European Standard the status of a national standard without any alteration. Up-to-date lists and bibliographical references concerning such national standards may be obtained on application to the Central Secretariat or to any CEN member.

This European Standard exists in three official versions (English, French, German). A version in any other language made by translation under the responsibility of a CEN member into its own language and notified to the Central Secretariat has the same status as the official versions.

CEN members are the national standards bodies of Austria, Belgium, Cyprus, Czech Republic, Denmark, Estonia, Finland, France, Germany, Greece, Hungary, Iceland, Ireland, Italy, Latvia, Lithuania, Luxembourg, Malta, Netherlands, Norway, Poland, Portugal, Romania, Slovakia, Slovenia, Spain, Sweden, Switzerland and United Kingdom.

EUROPEAN COMMITTEE FOR STANDARDIZATION
COMITÉ EUROPÉEN DE NORMALISATION
EUROPÄISCHES KOMITEE FÜR NORMUNG

Management Centre: rue de Stassart, 36 B-1050 Brussels

Ref. No. EN 4501:2006: E

Contents

Page

Foreword

This European Standard (EN 4501:2006) has been prepared by the European Association of Aerospace Manufacturers - Standardization (AECMA-STAN).

After enquiries and votes carried out in accordance with the rules of this Association, this Standard has received the approval of the National Associations and the Official Services of the member countries of AECMA, prior to its presentation to CEN.

This European Standard shall be given the status of a national standard, either by publication of an identical text or by endorsement, at the latest by December 2006, and conflicting national standards shall be withdrawn at the latest by December 2006.

Attention is drawn to the possibility that some of the elements of this document may be the subject of patent rights. CEN [and/or CENELEC] shall not be held responsible for identifying any or all such patent rights.

According to the CEN/CENELEC Internal Regulations, the national standards organizations of the following countries are bound to implement this European Standard: Austria, Belgium, Cyprus, Czech Republic, Denmark, Estonia, Finland, France, Germany, Greece, Hungary, Iceland, Ireland, Italy, Latvia, Lithuania, Luxembourg, Malta, Netherlands, Norway, Poland, Portugal, Romania, Slovakia, Slovenia, Spain, Sweden, Switzerland and the United Kingdom.

1 Scope

This standard specifies the characteristics of bolts, shouldered, thin hexagonal head, close tolerance shank, short thread, in titanium alloy, anodized, with aluminium pigmented coating, metric series.

Classification: 1 100 MPa [1] / 315 °C [2]

These bolts are intended to be used with washers EN 2414 and nuts EN 3230.

2 Normative references

The following referenced documents are indispensable for the application of this document. For dated references, only the edition cited applies. For undated references, the latest edition of the referenced document (including any amendments) applies.

ISO 3353-1, *Aerospace – Lead and runout threads – Part 1: Rolled external threads.*

ISO 5855-2, *Aerospace – MJ threads – Part 2: Limit dimensions for bolts and nuts.*

ISO 7913, *Aerospace – Bolts and screws, metric – Tolerances of form and position.*

ISO 9152, *Aerospace – Bolts, with MJ threads, in titanium alloys, strength class 1 100 MPa – Procurement specification.*

EN 2414, *Aerospace series – Washers, chamfered, with counterbore, in alloy steel, cadmium plated.* [3]

EN 2424, *Aerospace series – Marking of aerospace products.*

EN 3230, *Aerospace series – Nuts, hexagon, slotted / castellated, reduced height, normal across flats, in steel, cadmium plated – Classification: 900 MPa (at ambient temperature) / 235 °C*

EN 4016, *Aerospace series – Oversized bolts.* [3]

EN 4474, *Aerospace series – Aluminium pigmented coating – Coating methods.* [3]

EN 9100, *Aerospace series – Quality management systems – Requirements (based on ISO 9001:2000) and Quality systems – Model for quality assurance in design, development, production, installation and servicing (based on ISO 9001:1994)*

EN 9133, *Aerospace series – Quality management systems – Qualification Procedure for aerospace standard parts.*

MIL-L-87132B, *Lubricant, Cetyl Alcohol, 1-Hexadecanol, Application to Fasteners.* [4]

TR 3775, *Aerospace series – Bolts and pins – Materials.* [5]

---

1) Minimum tensile strength of the material at ambient temperature

2) Maximum temperature that the bolt can withstand without continuous change in its original characteristics, after return to ambient temperature. The maximum temperature is determined by the coating.

3) Published as AECMA Prestandard at the date of publication of this standard

4) Published by: Department of Defense (DoD), the Pentagon, Washington, D.C.20301, USA.

5) Published as AECMA Technical Report at the date of publication of this standard.

3 Required characteristics

3.1 Configuration - Dimensions - Masses

See Figures 1 and 2 and Table 1.

Dimensions and tolerances are expressed in millimetres and apply after coating (tolerance on shank diameter before coating is also specified).

3.2 Tolerances of form and position

See ISO 7913.

3.3 Materials

TR 3775 (titanium alloy, strength class 1 100 MPa)

3.4 Surface treatments

See EN 4474.

Lubrication with cetylic alcohol (chlorine free) according to MIL-L-87132

3,2 [0,8] Values in micrometres apply prior to surface treatment.

Break sharp edges 0,1 to 0,4.

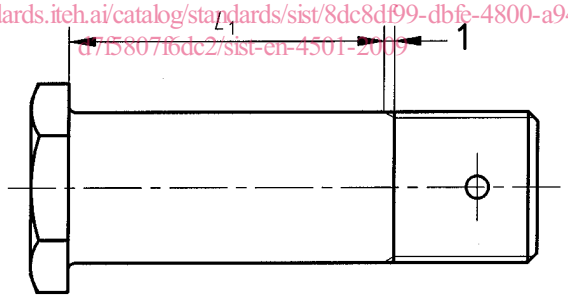

Key

1 Conforms to ISO 3353-1

For non-quoted dimensions, see Figure 2.

Figure 1 — Configuration for diameter codes 050 and 060

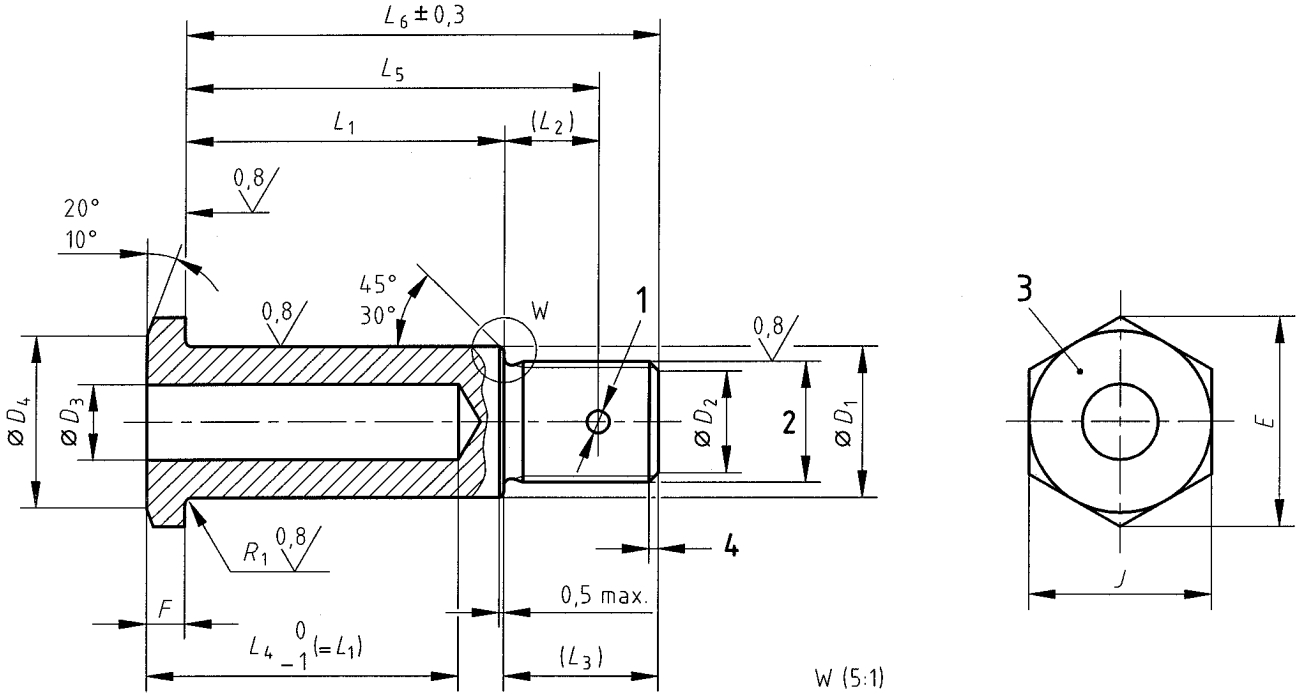

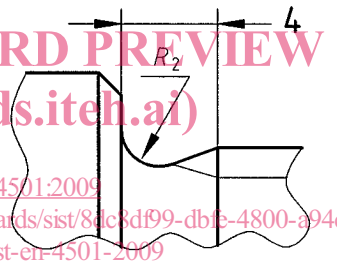

Key

1 One hole diameter D_5
2 Thread
3 Marking
4 Conforms to ISO 3353-1

Figure 2 — Configuration for diameter codes 080 to 250

Table 1

Diameter code	Thread [a]	D_1 nom.	D_1 Tol. before coating	D_1 Tol. after coating	D_2 ± 0,5	D_3 H13	D_4 min.	D_5 H13	E min.	F 0 – 0,3
050	MJ5×0,8-4h6h	5	– 0,030 – 0,045	– 0,010 – 0,035	3,4	–	7,4	1,5	8,7	2,5
060	MJ6×1-4h6h	6			4,2	–	9,4		10,9	
080	MJ6×1-4h6h	8	– 0,033 – 0,048	– 0,013 – 0,038		–				
100	MJ8×1-4h6h	10			6,2	–	12,3	1,9	14,3	3
120	MJ10×1,25-4h6h	12	– 0,036 – 0,051	– 0,016 – 0,041	7,9	–	16,3	2,4	18,9	3,5
150	MJ12×1,25-4h6h	15			9,8	8	18,3		21,1	4
170	MJ14×1,5-4h6h	17			11,5	9	21,3	3	24,5	
200	MJ16×1,5-4h6h	20	– 0,040 – 0,055	– 0,020 – 0,045	13,5	10	23,3		26,8	5
220	MJ18×1,5-4h6h	22			15,5	11	26,3	3,8	30,2	
250	MJ20×1,5-4h6h	25			17,5	12	29,3		33,6	

Diameter code	J nom.	J Tol.	$L_1 \pm 0,2$ [b,c] Code	$L_1 \pm 0,2$ [b,c] nom.	L_2	L_3	R_1 0 – 0,2	R_2 + 0,2 0	Mass [d] e	Mass [d] f
050	8	h12	005 to 050	5 to 50	6	9	0,4	–	1,56	0,09
060	10	h13	006 to 060	6 to 60	7	10		–	2,53	0,12
080			007 to 080	7 to 80				0,25	3,31	0,22
100	13		007 to 080	7 to 80	7,5	11,5		0,4	6,21	0,35
120	17		007 to 080	7 to 80	9	14,5			11,06	0,50
150	19		007 to 080	7 to 80	10	16	0,6	0,6	15,52	0,56
170	22		007 to 080	7 to 80	12	19			22,31	0,73
200	24		007 to 080	7 to 80	12,5	20,5	0,9	0,8	32,76	1,05
220	27		007 to 080	7 to 80	14,5	22,5			43,17	1,27
250	30		007 to 080	7 to 80	15	24,5			57,13	1,68

[a] In accordance with ISO 5855-2, except the thread major diameter "*d* max." which, for diameter codes 050 and 060, shall be equal to D_1 min. – 0,025.

[b] Increments:

1 for $L_1 \leq 30$

2 for $L_1 > 30$

[c] If greater lengths are required, they shall be chosen using increments of 2 mm. The length code corresponds to length L_1, completed by one or two zeros to the left, where necessary, to obtain a three digit code.

[d] Approximate values (kg/1 000 pieces), calculated on the basis of 4,45 kg/dm^3, for information purposes only

[e] Value for head and first L_6

[f] Increase for each additional millimetre of L_6.