SLOVENSKI STANDARD
SIST EN 3060:2009

01-september-2009

Aeronavtika - Kotalni leźaji za letala - Enoredni ǵlebasti krogliļ ni leźaji iz jekla, prevleļ eni s kadmijem, s samonastavljivo prirobnico, prevleļ eno s kadmijem - Mere in nosilnosti

Aerospace series - Bearings, airframe rolling - Rigid single row ball bearings in steel, cadmium plated, with flanged alignment housing, cadmium plated - Dimensions and loads

Luft- und Raumfahrt - Flugwerklager - Einreihige Rillenkugellager aus Stahl, verkadmet, mit selbsteinstellendem Flansch, verkadmet - Maße und Belastungen

Série aérospatiale - Roulements pour structures d'aéronefs - Roulements en acier, cadmiés, rigides, à une rangée de billes, avec bague d'alignement à collerette cadmiée - Dimensions et charges

Ta slovenski standard je istoveten z: EN 3060:2007

ICS:

49.035	Sestavni deli za letalsko in vesoljsko gradnjo	Components for aerospace construction

SIST EN 3060:2009 **en,de**

EUROPEAN STANDARD

NORME EUROPÉENNE

EUROPÄISCHE NORM

EN 3060

June 2007

ICS 49.035

English Version

Aerospace series - Bearings, airframe rolling - Rigid single row ball bearings in steel, cadmium plated, with flanged alignment housing, cadmium plated - Dimensions and loads

Série aérospatiale - Roulements pour structures d'aéronefs - Roulements en acier, cadmiés, rigides, à une rangée de billes, avec bague d'alignement à collerette cadmiée - Dimensions et charges

Luft- und Raumfahrt - Flugwerklager - Einreihige Rillenkugellager aus Stahl, verkadmet, mit selbsteinstellendem Flansch, verkadmet - Maße und Belastungen

This European Standard was approved by CEN on 16 March 2006.

CEN members are bound to comply with the CEN/CENELEC Internal Regulations which stipulate the conditions for giving this European Standard the status of a national standard without any alteration. Up-to-date lists and bibliographical references concerning such national standards may be obtained on application to the CEN Management Centre or to any CEN member.

This European Standard exists in three official versions (English, French, German). A version in any other language made by translation under the responsibility of a CEN member into its own language and notified to the CEN Management Centre has the same status as the official versions.

CEN members are the national standards bodies of Austria, Belgium, Bulgaria, Cyprus, Czech Republic, Denmark, Estonia, Finland, France, Germany, Greece, Hungary, Iceland, Ireland, Italy, Latvia, Lithuania, Luxembourg, Malta, Netherlands, Norway, Poland, Portugal, Romania, Slovakia, Slovenia, Spain, Sweden, Switzerland and United Kingdom.

EUROPEAN COMMITTEE FOR STANDARDIZATION
COMITÉ EUROPÉEN DE NORMALISATION
EUROPÄISCHES KOMITEE FÜR NORMUNG

Management Centre: rue de Stassart, 36 B-1050 Brussels

Contents

Page

Foreword 3
1 Scope 4
2 Normative references 4
3 Terms and definitions 5
4 Symbols and abbreviations 5
5 Required characteristics 5
6 Designation 10
7 Marking 11
8 Technical specification 11

Foreword

This document (EN 3060:2007) has been prepared by the Aerospace and Defence Industries Association of Europe - Standardization (ASD-STAN).

After enquiries and votes carried out in accordance with the rules of this Association, this Standard has received the approval of the National Associations and the Official Services of the member countries of ASD, prior to its presentation to CEN.

This European Standard shall be given the status of a national standard, either by publication of an identical text or by endorsement, at the latest by December 2007, and conflicting national standards shall be withdrawn at the latest by December 2007.

Attention is drawn to the possibility that some of the elements of this document may be the subject of patent rights. CEN [and/or CENELEC] shall not be held responsible for identifying any or all such patent rights.

According to the CEN/CENELEC Internal Regulations, the national standards organizations of the following countries are bound to implement this European Standard: Austria, Belgium, Bulgaria, Cyprus, Czech Republic, Denmark, Estonia, Finland, France, Germany, Greece, Hungary, Iceland, Ireland, Italy, Latvia, Lithuania, Luxembourg, Malta, Netherlands, Norway, Poland, Portugal, Romania, Slovakia, Slovenia, Spain, Sweden, Switzerland and the United Kingdom.

1 Scope

This standard specifies the characteristics of rigid single row ball bearings in steel, cadmium-plated with cadmium plated flanged alignment housing designed to withstand only slow rotations and oscillations under load.

They are intended for use in the hubs of torsion lever and in separated supports for airframe/aerospace applications.

The airframe rolling bearings defined in this standard may be used in the temperature range from – 54 °C to 150 °C.

However, being lubricated with the following greases (see EN 3727):

— ester type very high pressure grease (code letter A), operating range from – 73 °C to 121 °C or,

— synthetic hydrocarbons type very high pressure grease general purpose (code letter B) operating range from – 54 °C to 177 °C.

Their field of application when lubricated with code letter A grease is limited to 121 °C.

2 Normative references

The following referenced documents are indispensable for the application of this document. For dated references, only the edition cited applies. For undated references, the latest edition of the referenced document (including any amendments) applies.

ISO 1132-1, *Rolling bearings — Tolerances — Part 1: Terms and Definitions.*

EN 2031, *Steel FE-PL31 — Hardened and tempered — Bars – Aerospace series.* [1)]

EN 2133, *Aerospace series — Cadmium plating of steels with specified tensile strength ≤ 1 450 MPa, copper, copper alloys and nickel alloys.*

EN 2221, *Steel FE-PL31 — Hardened and tempered — Hollow bars 3,5 mm ≤ a ≤ 55 mm — Aerospace series.* [1)]

EN 2222, *Steel FE-PL31 — Hardened and tempered — Hand and die forgings — Aerospace series.* [1)]

EN 2249, *Aerospace series — Steel FE-PL52S — $R_m \geq 690$ MPa — Bars $D_e \leq 250$ mm.* [2)]

EN 2424, *Aerospace series — Marking of aerospace products.*

EN 3727, *Aerospace series — Bearings, airframe rolling rigid with flanged alignment housing — Technical specification.*

TR 4475, *Aerospace series — Bearings and mechanical transmissions for airframe applications — Vocabulary.* [3)]

---

1) Published as ASD Standard at the date of publication of this standard.

2) In preparation at the date of publication of this standard.

3) Published as ASD Technical report at the date of publication of this standard.

3 Terms and definitions

For the purposes of this document, the terms and definitions given in ISO 1132-1 and TR 4475 apply.

4 Symbols and abbreviations

Δ_{dmp} = single plane mean bore diameter deviation
Δ_{ds} = deviation of a single bore diameter
C_s = permissible static radial load
$F_{a\ max.}$ = permissible static axial load
G_a = axial internal clearance
G_r = radial internal clearance
S_{ia} = assembled bearing inner ring face runout with raceway
S_{ea} = assembled bearing outer ring face runout with raceway
K_{ia} = radial runout of assembled bearing inner ring
K_{ea} = radial runout of assembled bearing outer ring

5 Required characteristics

5.1 Dimensions – Clearances – Masses

Configuration and values: according to Figures 1 to 4 and Table 1; the bearings may be fitted with either seals or shields.

The dimensions and tolerances are expressed in millimetres and apply after surface treatment.

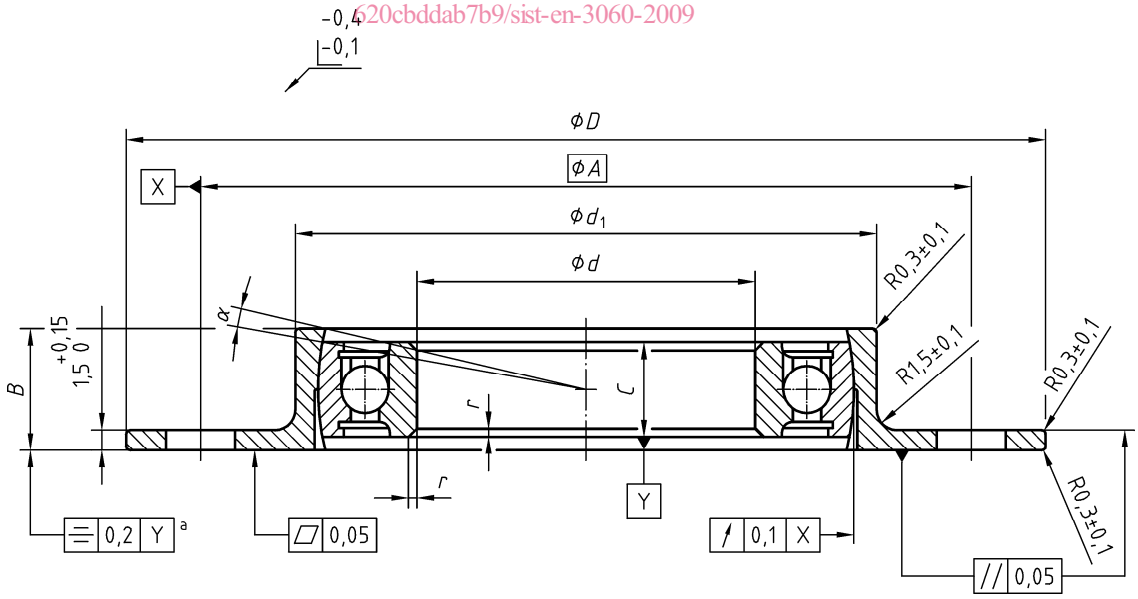

Key

a In both positions at 180° from the bearing

Figure 1

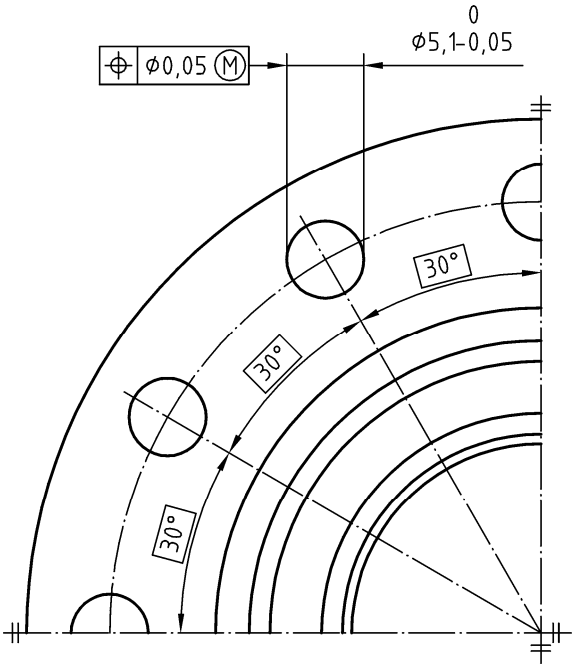

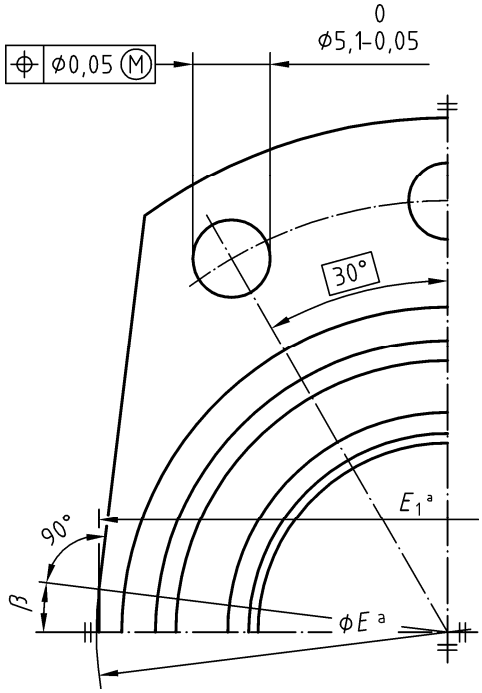

Key

[a] Transition area at the manufacturer's discretion

Figure 2 — Solid flanged alignment housing, code letter C

Figure 3 — Light weight flanged alignment housing, code letter D

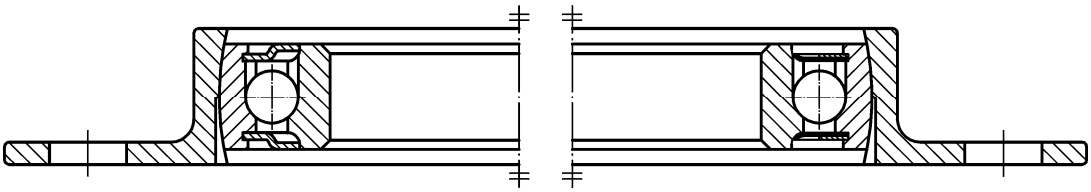

Type with shields code letter P **Type with seals code letter E**

NOTE 1 Installation of seals and shields is at the manufacturer's option.

NOTE 2 The shields shall not extend beyond width *C*.

Figure 4

Table 1

d		Tolerances µm		*A*	*B*	*C*	*D*	d_1	*E*	E_1	*r*	*α*	*β*	Masses g/pieces ≈	
Code number	nom.	Δ_{dmp}	Δ_{ds}	nom.	± 0,15	0 − 0,12	± 0,2	± 0,05	± 1	± 1		min.[a]	± 1°	Code letter C	Code letter D
16	16	0 − 8	+ 3 − 11	47	8	6	58	33	35	35	0,3 to 0,8	4°	0°	47	38
20	20	0 − 10	+ 3 − 13	52	9	7	63	38	43	42		3°30'	7°	62	50
25	25			57			68	43	46	46		3°		70	58
32	32	0 − 12	+ 3 − 15	66			77	52	56	55		2°30'	12°	94	78
35	35			69			80	55	59	58		2°20'		100	86
40	40			75	10	8	86	61	66	64		2°	15°	125	104
45	45			80			91	66	71	68				137	114
50	50			86			97	72	77	74		1°40'		155	129
63	63	0 − 15	+ 4 − 19	100	11	9	111	86	97	90		1°30'	22°	210	178

d	Internal clearances[b] µm		Runout tolerances[b] max. µm				Tilting torque N.m	Starting torque[b] max. mN.m	
	Axial max.	Radial	Axial		Radial				
Code number	G_a	G_r	S_{ia}	S_{ea}	K_{ia}	K_{ea}		Code letter P	Code letter E
16	120	3 to 11	40	40	25	40	0,8 to 3	8	12
20		5 to 13						9	14
25								12	21
32							1 to 4	21	30
35								27	35
40							1,3 to 4,5	33	44
45								39	53
50							1,5 to 5	48	68
63							2 to 6	83	113

[a] Maximum values for the user.

[b] See EN 3727.