SLOVENSKI STANDARD
oSIST prEN 15700:2007

01-september-2007

Naprave za kontinuirni transport - Varnost tekoḷ ih trakov za turistiḷ ne ali ġportne dejavnosti, ki sluǵijo predvsem prevozu oseb na smuḷ iġḷ ih

Safety of travelators for tourist or sporting use, used to transport passengers mainly in ski areas

Sicherheit von Bandförderern für touristische oder sportliche Aktivitäten, welche dem Personenverkehr hauptsächlich in Skigebieten dienen

Sécurité des tapis roulants, a vocation touristique ou sportive, transportant des personnes principalement pour les activités de sports d'hiver

Ta slovenski standard je istoveten z: prEN 15700

ICS:

91.140.90 Dvigala. Tekoḷ e stopnice Lifts. Escalators

oSIST prEN 15700:2007 en

EUROPEAN STANDARD

NORME EUROPÉENNE

EUROPÄISCHE NORM

DRAFT
prEN 15700

July 2007

ICS 91.140.90

English Version

Safety of travelators for tourist or sporting use, used to transport passengers mainly in ski areas

Sécurité des tapis roulants, à vocation touristique ou sportive, transportant des personnes principalement pour les activités de sports d'hiver

Sicherheit von Bandförderern für touristische oder sportliche Aktivitäten, welche dem Personenverkehr hauptsächlich in Skigebieten dienen

This draft European Standard is submitted to CEN members for enquiry. It has been drawn up by the Technical Committee CEN/TC 242.

If this draft becomes a European Standard, CEN members are bound to comply with the CEN/CENELEC Internal Regulations which stipulate the conditions for giving this European Standard the status of a national standard without any alteration.

This draft European Standard was established by CEN in three official versions (English, French, German). A version in any other language made by translation under the responsibility of a CEN member into its own language and notified to the CEN Management Centre has the same status as the official versions.

CEN members are the national standards bodies of Austria, Belgium, Bulgaria, Cyprus, Czech Republic, Denmark, Estonia, Finland, France, Germany, Greece, Hungary, Iceland, Ireland, Italy, Latvia, Lithuania, Luxembourg, Malta, Netherlands, Norway, Poland, Portugal, Romania, Slovakia, Slovenia, Spain, Sweden, Switzerland and United Kingdom.

Recipients of this draft are invited to submit, with their comments, notification of any relevant patent rights of which they are aware and to provide supporting documentation.

Warning : This document is not a European Standard. It is distributed for review and comments. It is subject to change without notice and shall not be referred to as a European Standard.

EUROPEAN COMMITTEE FOR STANDARDIZATION
COMITÉ EUROPÉEN DE NORMALISATION
EUROPÄISCHES KOMITEE FÜR NORMUNG

Management Centre: rue de Stassart, 36 B-1050 Brussels

Ref. No. prEN 15700:2007: E

Contents

Page

Foreword

This document (prEN 15700:2007) has been prepared by Technical Committee CEN/TC 242 “Safety requirements for passenger transportation by rope”, the secretariat of which is held by AFNOR.

This document is currently submitted to the CEN Enquiry.

This document has been prepared under a mandate given to CEN by the European Commission and the European Free Trade Association, and supports essential requirements of EU Directive(s).

For relationship with EU Directive(s), see informative Annex ZA, B, which is an integral part of this document.

1 Scope

1.1 General

This European Standard specifies safety requirements for travelators for tourist or sporting use, used to transport passengers mainly in ski areas.

These requirements cover only travelators for transporting winter sporting passengers on their snow-sliding devices or pedestrians wearing ski or après-ski boots and holding snow-sliding devices.

NOTE Snow-sliding devices include seated ski equipment for handicapped people.

This European Standard takes into consideration the automatic operation of these installations when no permanent staff is present directly at the installation.

It covers requirements relating to the prevention of accidents and safety at work.

This European Standard does not apply either to passenger conveyors defined in EN 115 or to loading bands defined in EN 1709.

1.2 Exceptions

Exceptions to this standard, particularly in the event of innovation, shall be the subject of a safety study and provide at least the same level of safety.

2 Normative references

The following referenced documents are indispensable for the application of this document. For dated references, only the edition cited applies. For undated references, the latest edition of the referenced document (including any amendments) applies.

EN 1907:2005, *Safety requirements for cableway installations designed to carry persons - Terminology*

EN 13243, *Safety requirements for cableway installations designed to carry persons - Electrical equipment other than for drive systems*

EN 13223, *Safety requirements for cableway installations designed to carry persons - Drive systems and other mechanical equipment*

EN 294, *Safety of machinery - Safety distances to prevent danger zones being reached by the upper limbs*

EN 619:2003, *Continuous handling equipment and systems - Safety and EMC requirements for equipment for mechanical handling of unit loads*

EN 115, *Safety rules for the construction and installation of escalators and passenger conveyors*

ENV 1993-1-1, *Eurocode 3 - Design of steel structures - Part 1-1: General rules and rules for building*

3 Terms and definitions

For the purposes of this document, the terms and definitions given in EN 1907:2005, in EN 619:2003 and the following apply.

3.1
travelator
installation used for winter sports activities on which the passengers are transported standing on a moving belt driven by a motor. The belt is either continuous or modular

4 Safety principles

It is assumed that the travelator will be used correctly corresponding to its intended purpose and not incorrectly. However, this document takes into account certain cases of imprudent behaviour of the passengers.

4.1 General safety principles

On the basis of a safety study, this subclause defines the hazards to be taken into account and the dangerous situations identified as being significant and requiring measures to be taken to prevent or reduce them. These measures are then described in the form of requirements in the rest of this standard

4.2 List of significant hazards

4.2.1 Mechanical hazards

— injury through falling onto the travelator or from the travelator;

— injury through colliding with the structures, the surroundings of the travelator or with other passenger;

— injury through cutting;

— injury of a third party against the travelator;

— injury through pinching, crushing or entrapment;

— injury through strangling resulting from an item of clothing getting caught;

— injury through contact with moving parts.

4.2.2 Electrical hazards

— injury through contact with live parts;

— burning;

— foreseeable influence from outside, in particular ambient conditions and electromagnetic fields.

4.3 List of hazardous situations or danger factors

— slipperiness of the belt;

— change in speed or difference in speed between the passenger and the belt;

— severe gradient or significant change in gradient;

— sudden stop or start of the belt;

— involuntary start of the installation;

— break in the belt or deterioration of the travelator;

— congestion at the top station;

— presence of foreign bodies on the belt or close to the belt;

— clearance between the belt and the safety flap;

— clearance between the modular elements of the belt;

— access to rotating parts;

— clearance between the belt and belt covering or another part of the travelator;

— height of the travelator above the ground;

— reversal of the running direction of the travelator;

— unsigned or unprotected travelator;

— failure of the electric circuit;

— inadequate signage;

— operation in climatic conditions unsuitable for use;

— inadequate clearance of snow.

5 General requirements

5.1 Installation of the travelator

The travelator shall be installed on ground compatible with the conditions of use and the applied loads defined by the manufacturer.

The ground shall not permit transverse tilting nor slipping of the travelator.

If necessary, the ground shall be treated and managed to meet these conditions.

If it is necessary to shim up the travelator supports, the shim stack shall be integral with the support.

5.2 Layout

The layout shall allow a passenger on the travelator to leave it safely if it stops.

The layout shall be a straight line in plan.

5.3 Longitudinal profile

The longitudinal profile shall not cause a passenger to lose his balance.

5.3.1 Line

At no point shall the gradient of the travelator belt exceed 25 %.

Two consecutive sections of belt of minimum length of 1,5 m each with a constant gradient, shall not have a gradient difference between them greater than 12,5 %.

5.3.2 Loading

At the downhill end of the belt, a loading plate shall be installed of uniform gradient and minimum length of 1 m. Its gradient relative to the horizontal shall be – 5 % and + 5 %.The gradient of the loading area in front of this plate shall be such that a skier can stop easily on it.

At the start, the travelator belt shall have a uniform gradient not differing by more than 12,5 % from that of the loading plate over a minimum length of 5 m.

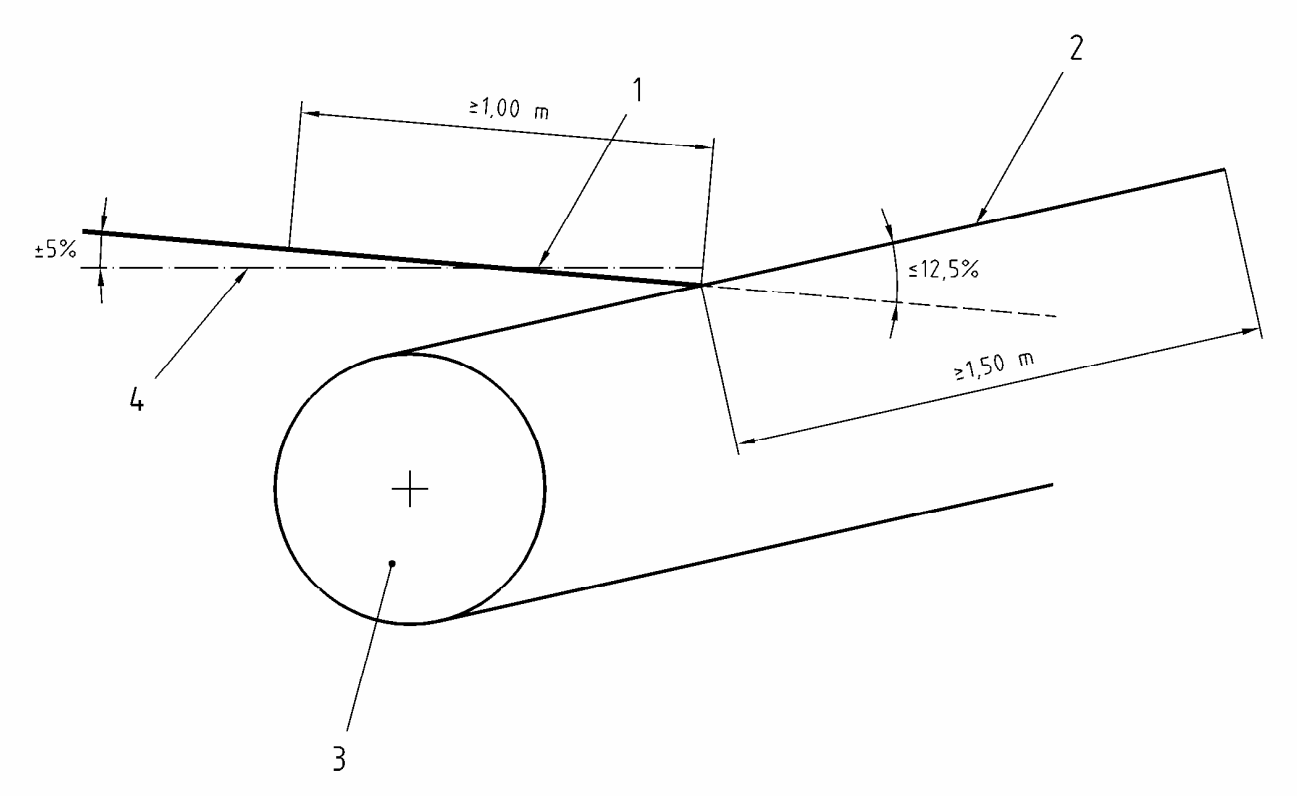

Key

1 Loading plate

2 Belt

3 Drum

4 Horizontal

Figure 1 — Loading

5.3.3 Unloading

The final element of the belt shall have a uniform gradient of ± 5 % relative to the horizontal over a minimum length of 1 m.

The penultimate element of the belt shall have a uniform maximum gradient of 12,5 % relative to the final element over a minimum length of 1,5 m.

The unloading area above the upper end of the belt shall have a counter-gradient of between 5 % and 15 %. Its minimum length shall be 2 m. This area shall start with an unloading plate.