TECHNICAL SPECIFICATION

# ISO/TS 15769

First edition
2000-12-01

# Hydrometric determinations — Liquid flow in open channels and partly filled pipes — Guidelines for the application of Doppler-based flow measurements

*Déterminations hydrométriques — Débit des liquides dans les canaux découverts et dans les conduites partiellement remplies — Lignes directrices pour l'application de mesurages du débit basés sur l'effet Doppler*



Reference number
ISO/TS 15769:2000(E)

ISO copyright office
Case postale 56 • CH-1211 Geneva 20
Tel. + 41 22 749 01 11
Fax + 41 22 749 09 47
E-mail copyright@iso.ch
Web www.iso.ch

Printed in Switzerland

 

# Contents

Page

## Foreword

ISO (the International Organization for Standardization) is a worldwide federation of national standards bodies (ISO member bodies). The work of preparing International Standards is normally carried out through ISO technical committees. Each member body interested in a subject for which a technical committee has been established has the right to be represented on that committee. International organizations, governmental and non-governmental, in liaison with ISO, also take part in the work. ISO collaborates closely with the International Electrotechnical Commission (IEC) on all matters of electrotechnical standardization.

International Standards are drafted in accordance with the rules given in the ISO/IEC Directives, Part 3.

The main task of technical committees is to prepare International Standards. Draft International Standards adopted by the technical committees are circulated to the member bodies for voting. Publication as an International Standard requires approval by at least 75 % of the member bodies casting a vote.

In other circumstances, particularly when there is an urgent market requirement for such documents, a technical committee may decide to publish other types of normative documents:

— an ISO Publicly Available Specification (ISO/PAS) represents an agreement between technical experts in an ISO working group and is accepted for publication if it is approved by more than 50 % of the members of the parent committee casting a vote;

— an ISO Technical Specification (ISO/TS) represents an agreement between the members of a technical committee and is accepted for publication if it is approved by 2/3 of the members of the committee casting a vote.



An ISO/PAS or ISO/TS is reviewed every three years with a view to deciding whether it can be transformed into an International Standard.

Attention is drawn to the possibility that some of the elements of this Technical Specification may be the subject of patent rights. ISO shall not be held responsible for identifying any or all such patent rights.

ISO/TS 15769 was prepared by Technical Committee ISO/TC 113, *Hydrometric determinations*, Subcommittee SC 1, *Velocity area methods*.

Annexes A and B of this Technical Specification are for information only.

 

## Introduction

Flow measurement using Doppler-based flowmeters fall into the category of velocity-area methods and, as with all variants of this approach, flow estimation is a two-stage process. Measurements are made to derive estimates of:

a) mean channel velocity, using the principle of Doppler shift,

b) depth, from which cross-sectional area is computed with a knowledge of the relationship between depth and area (i.e. the profile of the cross-section).

Most difficulties governing this method relate to the estimation of mean channel velocity and the degree to which computed velocities can be assumed to be representative of the true mean velocity through the measurement section. The accuracy with which the calculated velocities represent the mean velocity is influenced by various factors which are considered in clause 4. This guide focuses on the process of velocity estimation and the conditions and practices which may help to deliver optimum results. However, it should be recognized that the accuracy of overall flow determination also depends on the accuracy of depth measurement. The influence of meter location and sensitivity of cross-sectional area to depth variation will have a bearing on performance.



 

# Hydrometric determinations — Liquid flow in open channels and partly filled pipes — Guidelines for the application of Doppler-based flow measurements

## 1 Scope

This Technical Specification gives guidelines for the selection and use of Doppler-based flowmeters for the measurement of liquid flow in small open channels and partly filled pipes. It is applicable to whole-channel flow measurements using a single meter at a fixed point in the cross-section.

It is not applicable to flow measurements made using Doppler-based current meters for point velocity measurement nor using mobile profiling systems.

A limitation of this technique is that measurement is made of the velocity of particles or other reflectors being transported by the liquid rather than that of the liquid itself.

NOTE Though the title refers to liquid flow in general, the main use of flowmeters which use the Doppler principle is for water or water-based liquid and particular reference is often made in the text to water.



## 2 Normative references



The following normative documents contain provisions which, through reference in this text, constitute provisions of this Technical Specification. For dated references, subsequent amendments to, or revisions of, any of these publications do not apply. However, parties to agreements based on this Technical Specification are encouraged to investigate the possibility of applying the most recent editions of the normative documents indicated below. For undated references, the latest edition of the normative document referred to applies. Members of ISO and IEC maintain registers of currently valid International Standards.

ISO 772, *Hydrometric determinations — Vocabulary and symbols.*

ISO/TR 8363, *Measurement of liquid flow in open channels — General guidelines for selection of method.*

## 3 Terms and definitions

For the purposes of this Technical Specification, the terms and definitions given in ISO 772 apply.

## 4 Principle

This method of velocity measurement is based on a phenomenon first identified by Christian Doppler in 1843. The principle of “Doppler shift” describes the difference or shift which occurs in the frequency of emitted sound waves as they are reflected back from a moving body.

The sensors of Doppler systems normally contain a transmitting and a receiving device (see Figure 1). A sound wave of high frequency ($f_S$) is transmitted into the flow of water and intercepted and reflected back at a different frequency by tiny particles or air bubbles (reflectors). A typical reflector “$n$” produces a frequency shift $f_{D,n}$. The “shift” between transmitted and reflected frequencies is proportional to the movement of particles relative to the position of the sound source (i.e. the sensor).

 

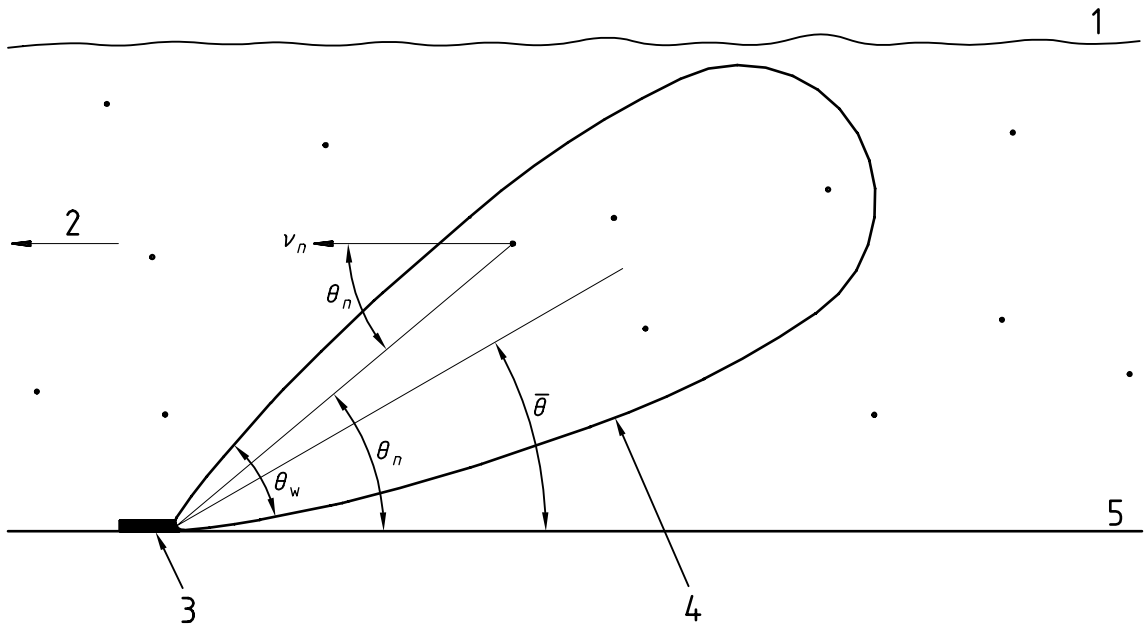


$\theta_n$ is the angle between direction of motion of particle $n$ and the sensor

$\bar{\theta}$ is the angle between centre of beam and assumed flow direction (this is referred to as the “beam angle” or “projection angle”)

$\theta_w$ is the beam width or spread



**Key**

1 Surface
2 Flow
3 Sensor
4 “Envelope” of ultrasonic beam
5 Bed



**Figure 1 — Principle of Doppler-ultrasonic flow measurement**

Doppler shift only occurs if there is relative movement between the transmitted sound source and the reflected sound source. The velocity of moving reflector “$n$” can be calculated from the following:

a) the magnitude of the Doppler shift;

b) the angle between the transmitted beam and the direction of movement;

c) the velocity of sound in the water.

It can be shown that:

$$v_n = \frac{f_{D,n} \cdot c}{2 f_S \cdot \cos \theta_n}$$

where

$v_n$ is the relative velocity between transmitted sound source and reflector $n$;

$f_{D,n}$ is the Doppler frequency shift produced by reflector $n$;

$f_s$ is the frequency of sound with no movement;

$c$ is the velocity of sound in water;

$\theta_n$ is the angle between the reflectors' line of motion (the assumed flow path) and the direction of the acoustic beam.

A Doppler flowmeter measures the resultant frequency shift produced by a large number of reflectors of which reflector $n$ is typical and from which the mean velocity can be computed. Consequently, the velocity of moving particles, and not the velocity of water, is measured. By measuring the velocity of many particles, the mean water velocity in front of the sensor can be estimated. Although the particles, if small, travel at almost the same speed as the water, sampling errors may occur. These errors depend on the spatial and velocity distribution of the particles as well as the extent of penetration of the ultrasonic beam. Instruments are neither point-velocity meters nor whole-channel meters. The area sampled by the ultrasonic beam can be visualized, by analogy, to shining a torch in front of the sensor. The purpose of using such an approach is to obtain a representative sample of the full cross-sectional velocity.

The cross-sectional area is also required for the velocity-area calculation of discharge. Most systems incorporate a pressure transducer in their sensors and by combining water depth with knowledge of the cross-sectional profile, the flow can be calculated.

## 5 Factors affecting operation and accuracy

### 5.1 General



The factors affecting the performance of Doppler flowmeters may be broadly divided into:

— characteristics of the instrument,

— characteristics of either the channel or the liquid flowing in it.



However, these factors interact and shall be considered together.

### 5.2 Characteristics of the instrument

#### 5.2.1 General considerations

The characteristics of the instrument and in particular the sensor have a bearing on its performance in any given situation. There is no optimal set of characteristics. Certain characteristics may make a particular instrument perform better under certain conditions but worse under others. A list of characteristics and their influence on the performance of the instrument are given in 5.2.2 to 5.2.6.

#### 5.2.2 Ultrasonic beam angle

The ultrasonic "beam" is usually transmitted in the approximate shape of a cone. The term "beam angle", or "projection angle" in this context, refers to the angle between the cone axis and the flow direction. The effects of beam "angle" should be considered together with those due to beam "width" (5.2.3).

The sensor has to be installed so as to remain beneath the surface of the liquid under all conditions and is positioned so that the beam cone reaches the lateral extremities of the channel as far as possible. The installation position is often a compromise and the installer is frequently obliged to install the sensor on the channel bed, somewhere near the centre of the cross-section. An off-centre position is also sometimes used.

Assuming the sensor is installed on the bed of the channel, a high angle between the flow direction and ultrasonic beam (e.g. between 30° and 50°) enable signals to be obtained throughout the depth up to the limit of the penetration of the beam. However, no signals are obtained close to the bed on either side of the sensor. Serious sampling errors can occur particularly when the ratio between the depth of water and width of the channel is low.

Conversely, a shallow beam angle allows flow to be measured close to the bed and is best for shallow depths. However, if the channel is too wide or not sufficiently long, a beam at a shallow angle may not reach the lateral extremities of the channel. In a long channel where, theoretically, the beam angle should be able to reach the extremities of the channel, the penetration (range) of the beam may not be sufficient to do so.

Beam width also has a bearing on the velocity sampling. See 5.2.3.

Figure 2 indicates the significance of the beam angle in relation to sampling.

It may be possible to adjust the beam angle, to improve suitability to the given site conditions, provided that an appropriate correction is made during the velocity calculation.

### 5.2.3 Beam “width”

Beam width is a loose term indicating the spread of the beam as shown in Figure 1. It is a function of sound frequency and diameter of the transmitter. The designer of the instrument may be constrained by other factors in his scope to vary the beam width.

A wide beam, i.e. one with a cone having a large spread, gives the best coverage because signals are obtained over a greater area of the channel. However, there is uncertainty in the velocity measurement since the wide beam means that the actual angle made by a particular reflector ($\theta_n$ in Figure 1) may be different from the mean beam angle assumed by the instrument ($\bar{\theta}$ in Figure 1). Furthermore, a bias can possibly occur and is dependent on the distribution of the velocity and on the reflector concentration.

A narrow beam width would have less angular uncertainty but a poorer coverage (sampling).



If the distribution of reflectors and velocity are both fairly uniform, sampling is unimportant and a narrow beam width would give the best results because the measurement uncertainty relating to beam angle is minimized.

If the velocity distribution is non-uniform, a wide beam width gives a better sample of velocity than a narrow one. Furthermore, if the reflector distribution is uniform, the error relating to the beam angle may be acceptable and a wide beam width would be preferable.



If neither the velocity profile nor the reflector density is uniform, a significant uncertainty of measurement can be expected whatever the beam width.

### 5.2.4 Ultrasonic frequency

A lower frequency generally penetrates further (greater range) but requires a larger transducer for a given beam width. Therefore, a lower frequency transducer is preferable for a channel of larger width or greater depth if the larger sensor size does not cause serious obstruction.

In practice, frequencies between 500 kHz and 1 MHz are generally used.

### 5.2.5 Method of determining velocity of sound

The velocity of sound in water varies with density, which is a function of temperature and dissolved material (e.g. salinity). Since velocity of sound appears in the flow formula, errors can be made if no adjustment is made. Some instruments have no dynamic adjustment though it is possible to put in a fixed calibration factor. This is acceptable provided the conditions of measurement do not change. Other instruments have a temperature sensor and provide a dynamic correction for temperature effects. This is acceptable for conditions where the content of dissolved material in water remains constant but the temperature changes.

When the temperature and dissolved particle content both vary, the only satisfactory solution is for the instrument to actually measure the velocity of sound.

Alternatively, if the temperature and salinity are measured or estimated separately, a retrospective correction can be made to the recorded data.

The effect of not making full or partial allowance for these variations is described in 5.3.5.

 

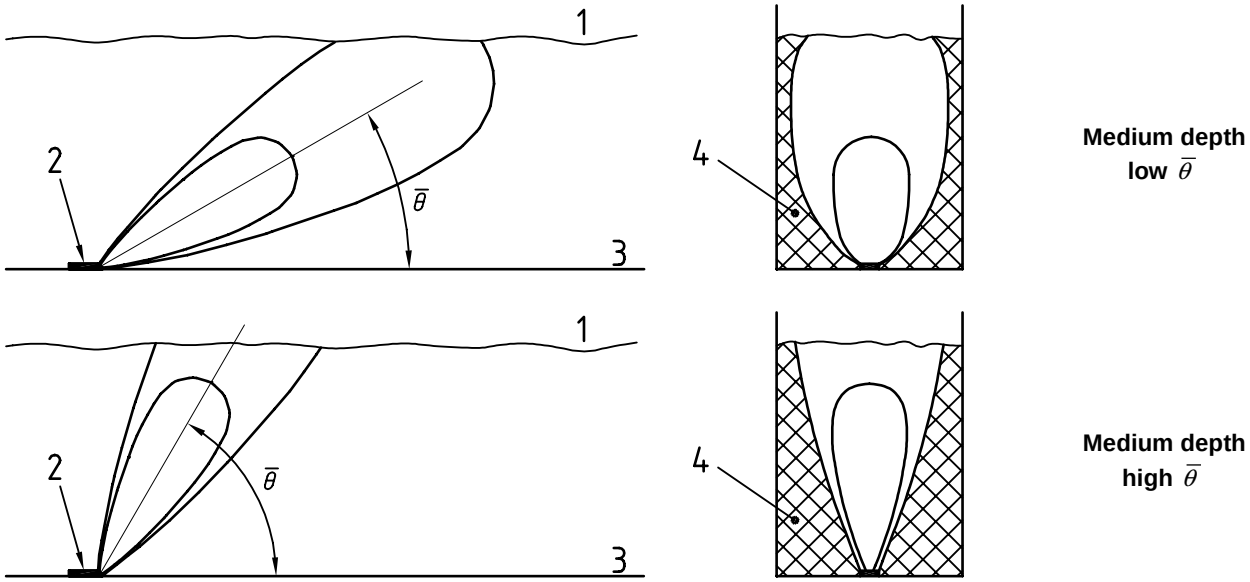


a) At low to medium depth a small $\bar{\theta}$ is preferable

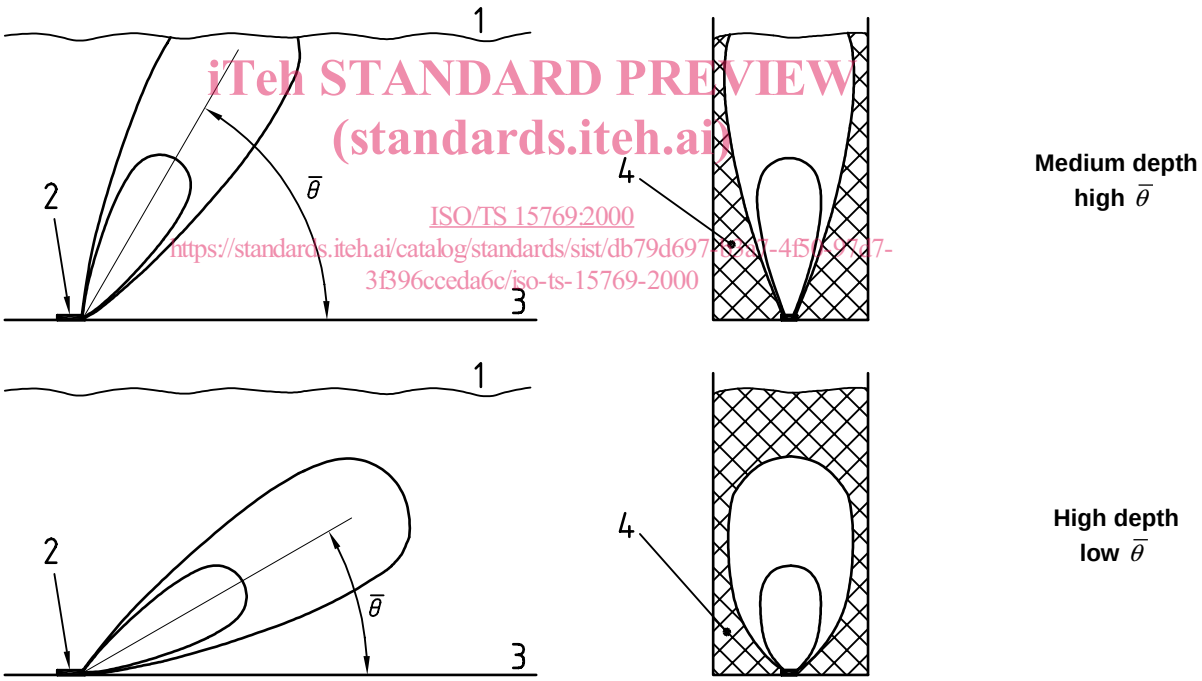




b) At high depth a high $\bar{\theta}$ is preferable

**Key**

1 Surface
2 Sensor
3 Bed
4 Unsampled area (hatched)

**Figure 2 — Beam angle effects**

### 5.2.6 Signal processing

The calculation of flow velocity is based on the assumption that a frequency shift results from a single moving reflector. However, in reality, many reflectors are involved, moving at different speeds in different parts of the beam. The processor has to employ averaging methods for measuring frequency shifts.

Processing methods vary. Simple, analogue methods are likely to give a higher weighting to stronger signals from nearby reflectors. This method may give erroneous results if the velocity profile is not uniform and an additional non-uniform effect may need to be considered with respect to beam angle and width.

Instruments employing more sophisticated processing methods attempt to remove the signal strength effect, for example by using Fourier transform techniques. Though this is an improvement, such instruments remain sensitive to non-uniform effects in the water itself.

Some instruments employing “time-gating” or “range-gating” methods attempt to separate the signals from different parts of the space in the beam so as to produce information about the distribution of velocity. This is possible by transmitting signals in timed bursts and examining the received reflections at different delays so as to estimate the velocity variation with respect to the distance from the sensor. However, it is not possible to determine the angle from which the signals have come within the beam width. Although this information is useful for profiling-type instruments where velocity profiles are determined in deep water in which the beam is generally aimed across the flow (usually downwards), it is of little value in flowmeters where the beam angle is generally aimed lengthwise in the channel. This is the consequence of information being received from different distances along the channel and not across it. Nonetheless, such methods prevent the processor from becoming saturated from an overload of very close, strong signals since they can be identified by the short-time delay.

An exception to these observations would be the case of an instrument incorporating multiple narrow beams or a single narrow beam whose direction is capable of automatic variation. In such cases, velocities from small defined volumes within the channel can be measured. Such facilities are not normally available in instruments that fall within the scope of this Technical Specification.



It is important to remember that although instruments employing techniques like time gating or Fourier transform analysis are likely to perform better in terms of short range bias, their range is still limited by beam penetration. As the channel size increases, these techniques are prone to another type of range-related sampling error.

### 5.2.7 Depth measurement

In instruments of this type, depth is commonly measured by means of an integral pressure-activated sensor. The accuracy of these devices is dependent on the range for which they are designed (± 0,5 % of range is a typical figure). The manufacturer’s specification should be consulted. The effect of surface irregularities may degrade the accuracy further. The significance of the depth uncertainty depends on the channel shape, see section 5.3.7.

Care should be taken in the case of a closed conduit which sometimes runs full and at other times only partly full. When full, the pressure can significantly exceed that produced by a head of water equal to the height of the conduit. This can cause problems for a pressure depth-transducer. The depth transducer should be capable of withstanding the maximum pressure. If it is not capable, then alternatively a low-sensitivity transducer (i.e. with a range much greater than the conduit height) should be used, thus limiting the accuracy. Again the manufacturer’s specification should be consulted. A special transducer or an alternative method of measuring depth may be required.

## 5.3 Channel and water characteristics

### 5.3.1 Channel geometry

As the channel becomes wider, the limited range of the instrument causes the sampled velocity to be obtained from a limited part of the whole channel. The consequences of this limited sampling range depend on the homogeneity of flow velocity and particle distribution. Moreover, the density of particles also affect this range as does the depth of water. As a general guide, care should be taken if the width is greater than 2 m.

 