SLOVENSKI STANDARD
SIST EN 915:2009

01-januar-2009

Nadomeġļa:
SIST EN 915:1996

Gimnastiļna oprema - Dvoviġinska bradlja - Zahteve in preskusne metode, vključno z varnostjo

Gymnastic equipment - Asymmetric bars - Requirements and test methods including safety

Turngeräte - Stufenbarren - Anforderungen und Prüfverfahren einschließlich Sicherheit

Matériel de gymnastique — Barres asymétriques — Exigences et méthodes d'essai y compris la sécurité

Ta slovenski standard je istoveten z: EN 915:2008

ICS:

97.220.30 Oprema za dvoranske športe Indoor sports equipment

SIST EN 915:2009 **en,fr,de**

EUROPEAN STANDARD

NORME EUROPÉENNE

EUROPÄISCHE NORM

EN 915

November 2008

ICS 97.220.30

Supersedes EN 915:1996

English Version

Gymnastic equipment - Asymmetric bars - Requirements and test methods including safety

Matériel de gymnastique - Barres asymétriques - Exigences et méthodes d'essai y compris la sécurité

Turngeräte - Stufenbarren - Anforderungen und Prüfverfahren einschließlich Sicherheit

This European Standard was approved by CEN on 27 September 2008.

CEN members are bound to comply with the CEN/CENELEC Internal Regulations which stipulate the conditions for giving this European Standard the status of a national standard without any alteration. Up-to-date lists and bibliographical references concerning such national standards may be obtained on application to the CEN Management Centre or to any CEN member.

This European Standard exists in three official versions (English, French, German). A version in any other language made by translation under the responsibility of a CEN member into its own language and notified to the CEN Management Centre has the same status as the official versions.

CEN members are the national standards bodies of Austria, Belgium, Bulgaria, Cyprus, Czech Republic, Denmark, Estonia, Finland, France, Germany, Greece, Hungary, Iceland, Ireland, Italy, Latvia, Lithuania, Luxembourg, Malta, Netherlands, Norway, Poland, Portugal, Romania, Slovakia, Slovenia, Spain, Sweden, Switzerland and United Kingdom.

EUROPEAN COMMITTEE FOR STANDARDIZATION
COMITÉ EUROPÉEN DE NORMALISATION
EUROPÄISCHES KOMITEE FÜR NORMUNG

Management Centre: rue de Stassart, 36 B-1050 Brussels

Ref. No. EN 915:2008: E

Contents

Page

Foreword

This document (EN 915:2008) has been prepared by Technical Committee CEN/TC 136 “Sports, playground and other recreational facilities and equipment”, the secretariat of which is held by DIN.

This European Standard shall be given the status of a national standard, either by publication of an identical text or by endorsement, at the latest by May 2009, and conflicting national standards shall be withdrawn at the latest by May 2009.

Attention is drawn to the possibility that some of the elements of this document may be the subject of patent rights. CEN [and/or CENELEC] shall not be held responsible for identifying any or all such patent rights.

This document supersedes EN 915:1996.

This European Standard is one of several standards, each of which deals with a particular type or a particular group of gymnastic equipment.

The principal changes from the previous edition of EN 915 are as follows:

a) the dimensions in Table 2 have been adapted;

b) safety requirements and test methods have been modified;

c) entrapment has been included;

d) requirements and test methods for endurance have been deleted.

According to the CEN/CENELEC Internal Regulations, the national standards organizations of the following countries are bound to implement this European Standard: Austria, Belgium, Bulgaria, Cyprus, Czech Republic, Denmark, Estonia, Finland, France, Germany, Greece, Hungary, Iceland, Ireland, Italy, Latvia, Lithuania, Luxembourg, Malta, Netherlands, Norway, Poland, Portugal, Romania, Slovakia, Slovenia, Spain, Sweden, Switzerland and the United Kingdom.

1 Scope

This European Standard specifies functional requirements (see Clause 3) and specific safety requirements in addition to the general safety requirements in EN 913 (see Clause 4) which shall be read in conjunction with this standard.

This European Standard is applicable to 2 types of asymmetric bars (see Table 1) intended for use under supervision of a competent person.

2 Normative references

The following referenced documents are indispensable for the application of this document. For dated references, only the edition cited applies. For undated references, the latest edition of the referenced document (including any amendments) applies.

EN 913, *Gymnastic equipment — General safety requirements and test methods*

3 Requirements

3.1 Classification

Asymmetric bars shall be classified by the design (types and sizes) as shown in Table 1.

Table 1 — Types

Type	Size	Description
1	—	freestanding asymmetric bar without fixing points
2	1 and 2	asymmetric bar with fixing points

3.2 Dimensions

All asymmetric bars shall comply with the dimensions specified in Table 2 and Figure 1.

The diameter of the bar profile shall be circular (40 ± 1) mm.

Dimensions in millimetres

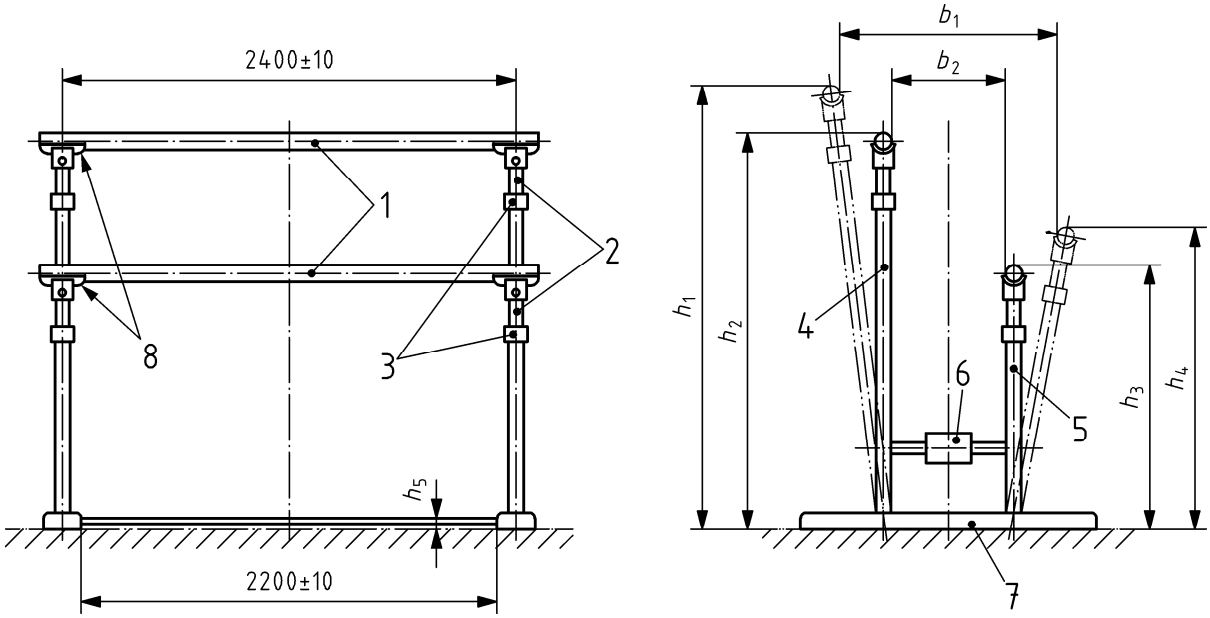

Key

1 Bar
2 Upright extension
3 Stop, lock and adjustment device
4 Higher upright
5 Lower upright
6 Horizontal adjustment device
7 Base
8 Supporting cup point (Type 1)

NOTE Type 2 does not have supporting cup points. The bars are connected to the uprights according to the individual manufacturer's design.

Figure 1 — Asymmetric bars

Table 2 — Typical dimensions

Dimensions in millimetres

Type	Size	Minimum range of adjustment						
		b_1	b_2	h_1	h_2	h_3	h_4	h_5 max.
1	—	1 150	600	2 350	2 100	1 400	1 600	60
2	1	1 300	600	2 350	2 100	1 400	1 600	60
	2	1 625	1 025	2 550	2 400	1 600	1 750	10

4 Safety requirements

4.1 General requirements

Asymmetric bars shall comply with the requirements of EN 913, except insofar as they are modified by this European Standard.

4.2 Entrapment

The entrapment requirements of EN 913 relate to the uprights, horizontal adjustment devices and connections between them as well as bars but excluding the bar connections.

4.3 Stability

When tested in accordance with 5.2, equipment shall not tip in any direction when subjected to a horizontal force representing 40 % of the self weight of the equipment with a minimum of 400 N. The force shall be applied at the middle of the upper bar and perpendicular to its length.

4.4 Vertical stiffness and residual deflection

When each bar is tested in accordance with 5.3 using a force of 1 350 N ± 50 N, the deflection of each bar shall be a minimum of 40 mm and a maximum of 100 mm. The residual deflection shall be no greater than 1 mm.

4.5 Strength

When each bar is tested in accordance with 5.4 using a vertical force of 2 850 N ± 50 N the equipment shall show no signs of fracture, rupture or defects.

4.6 Rigidity of framework

For type 1 equipment when tested in accordance with 5.2, the bar at the supporting cup point shall not deflect by more than 20 mm in the longitudinal or the transverse direction when subjected to horizontal forces of 570 N ± 20 N in each of these directions. For type 2 equipment when tested in accordance with 5.2, the bar shall not deflect by more than 20 mm at the attachment points in the transverse direction when subjected to a horizontal force of 570 N ± 20 N in that direction.

Transverse forces shall be applied to the middle of the bar and perpendicular to its length. Longitudinal forces shall be applied along the axis of the bar.

5 Test methods

5.1 General

All loading tests shall be carried out with the bars set at their maximum useful heights.

5.2 Determination of stability and rigidity

5.2.1 Principle

A horizontal force is applied to the equipment in the specified manner.

5.2.2 Apparatus

A strap (100 ± 1) mm wide.

5.2.3 Test temperature

Condition the equipment for a minimum of 3 h at a test temperature of (23 ± 2) °C.

5.2.4 Procedure

Block freestanding equipment (type 1) on the ground to avoid the sliding.

Apply the specified horizontal force for a period of 65 s ± 5 s.

Note any tipping of the equipment. When required, measure the deflection of the bar supporting cup in the direction of the applied force.

5.2.5 Expression of results

Report whether tipping has occurred. When required, report the deflection of the bar supporting cup in millimetres.

5.3 Determination of stiffness and residual deflection

5.3.1 Principle

A vertical force is applied to the centre of each bar and any deflection is measured. The force is then removed and any residual deflection is measured.

5.3.2 Apparatus

A strap (100 ± 1) mm wide.

5.3.3 Test temperature

Condition the equipment for a minimum of 3 h at a test temperature of (23 ± 2)°C.

5.3.4 Procedure

Apply a vertical force at the centre of the bar for 65 s ± 5 s.

Measure the position of the loaded component from any convenient datum point. Record the deflection at the centre of the bar.

Remove the force. Measure the residual deflection 30 min $^{+1}_{-0}$ min after removal of the force. Record any residual deflection.

5.3.5 Expression of results

Express stiffness as the deflection under load in millimetres. Express the residual deflection as the deflection in millimetres remaining 30 min $^{+1}_{-0}$ min after the removal of the load.