# SLOVENSKI STANDARD

## SIST EN 13530-2:2003/AC:2007

## 01-januar-2007

---

**Kriogene posode ï Velike premiļ ne, vakuumsko izolirane posode ï 2. del: Naļ rtovanje, izdelava, nadzor in preskus**

Cryogenic vessels - Large transportable vacuum insulated vessels - Part 2: Design, fabrication, inspection and testing

Kryo-Behälter - Große ortsbewegliche, vakuum-isolierte Behälter - Teil 2: Bemessung, Herstellung und Prüfung



Récipients cryogéniques - Grands récipients transportables isolés sous vide - Partie 2: Conception, fabrication, inspection et essais



**Ta slovenski standard je istoveten z: EN 13530-2:2002/AC:2006**

---

**ICS:**

23.020.40 Proti mrazu odporne posode (kriogenske posode) Cryogenic vessels

**SIST EN 13530-2:2003/AC:2007 en,fr,de**

EUROPEAN STANDARD

NORME EUROPÉENNE

EUROPÄISCHE NORM

# EN 13530-2:2002/AC

August 2006
Août 2006
August 2006

**ICS** 23.020.40

English version
Version Française
Deutsche Fassung

## Cryogenic vessels - Large transportable vacuum insulated vessels - Part 2: Design, fabrication, inspection and testing

## Récipients cryogéniques - Grands récipients transportables isolés sous vide - Partie 2: Conception, fabrication, inspection et essais

## Kryo-Behälter - Große ortsbewegliche, vakuum-isolierte Behälter - Teil 2: Bemessung, Herstellung und Prüfung

This corrigendum becomes effective on 23 August 2006 for incorporation in the three official language versions of the EN.



Ce corrigendum prendra effet le 23 août 2006 pour incorporation dans les trois versions linguistiques officielles de la EN.



Die Berichtigung tritt am 23.August 2006 zur Einarbeitung in die drei offiziellen Sprachfassungen der EN in Kraft.



EUROPEAN COMMITTEE FOR STANDARDIZATION
COMITÉ EUROPÉEN DE NORMALISATION
EUROPÄISCHES KOMITEE FÜR NORMUNG

**Management Centre: rue de Stassart, 36 B-1050 Brussels**



Ref. No.:EN 13530-2:2002/AC:2006 D/E/F

# English version

Replace the following figures:

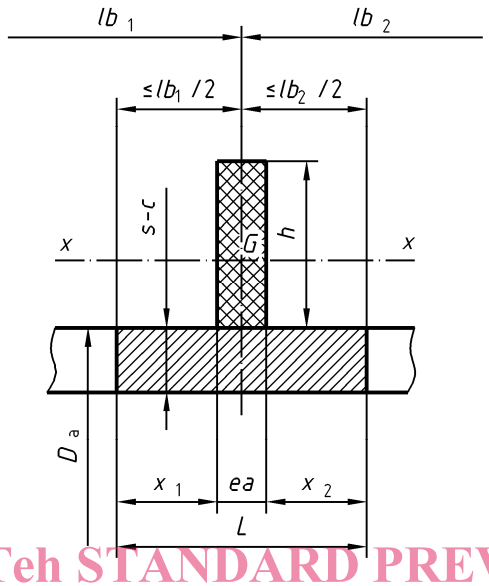




Modify key to read : $h/e_a \leq 16$



**Figure 3a)**

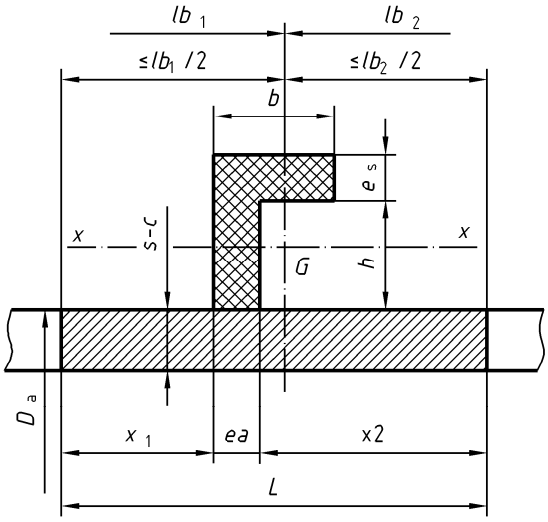


Modify the formula given in the key to read $0{,}55\sqrt{Da \cdot es}$

**Figure 3b)**

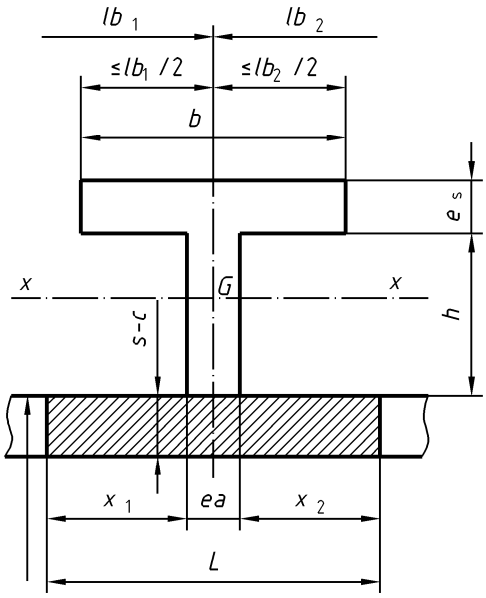


**Figure 3c)**



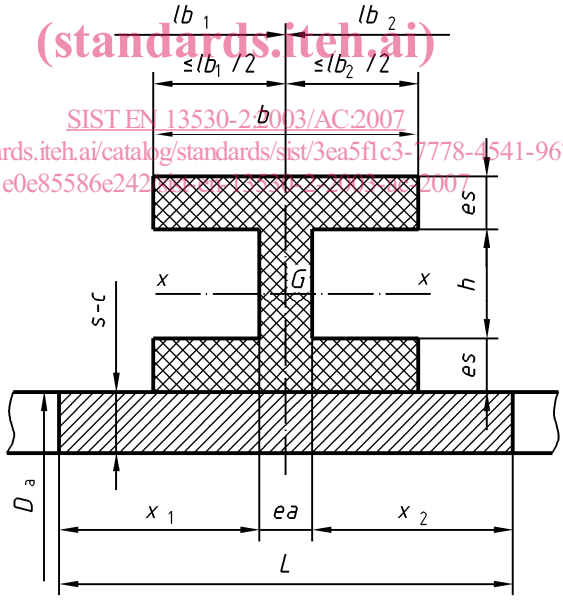


**Figure 3d)**

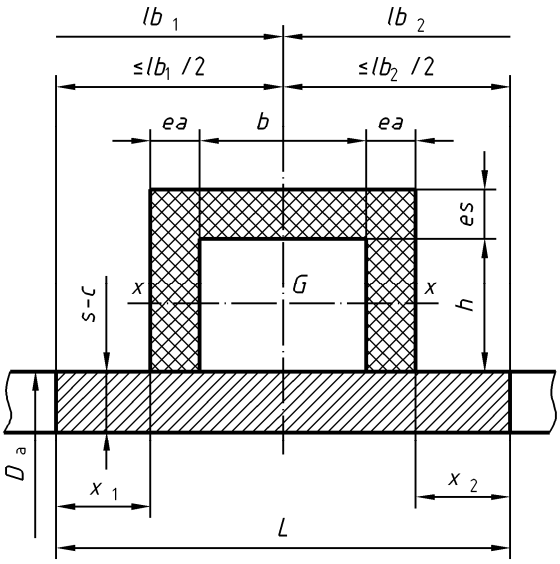


Modify key to read : $h/e_a \leq 50$



$$x_1 \leq \min\left\{0{,}55\sqrt{D_a(s-c)}\ ;\frac{l_{b1}}{2}\right\} \qquad x_2 \leq \min\left\{0{,}55\sqrt{D_a(s-c)}\ ;\frac{l_{b2}}{2}\right\}$$



**Figure 3e)**

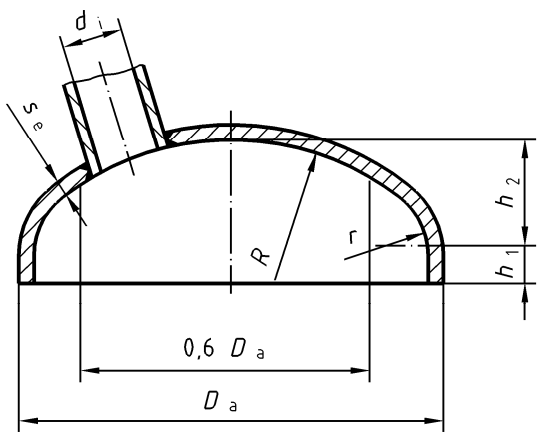


**Figure 4b)**

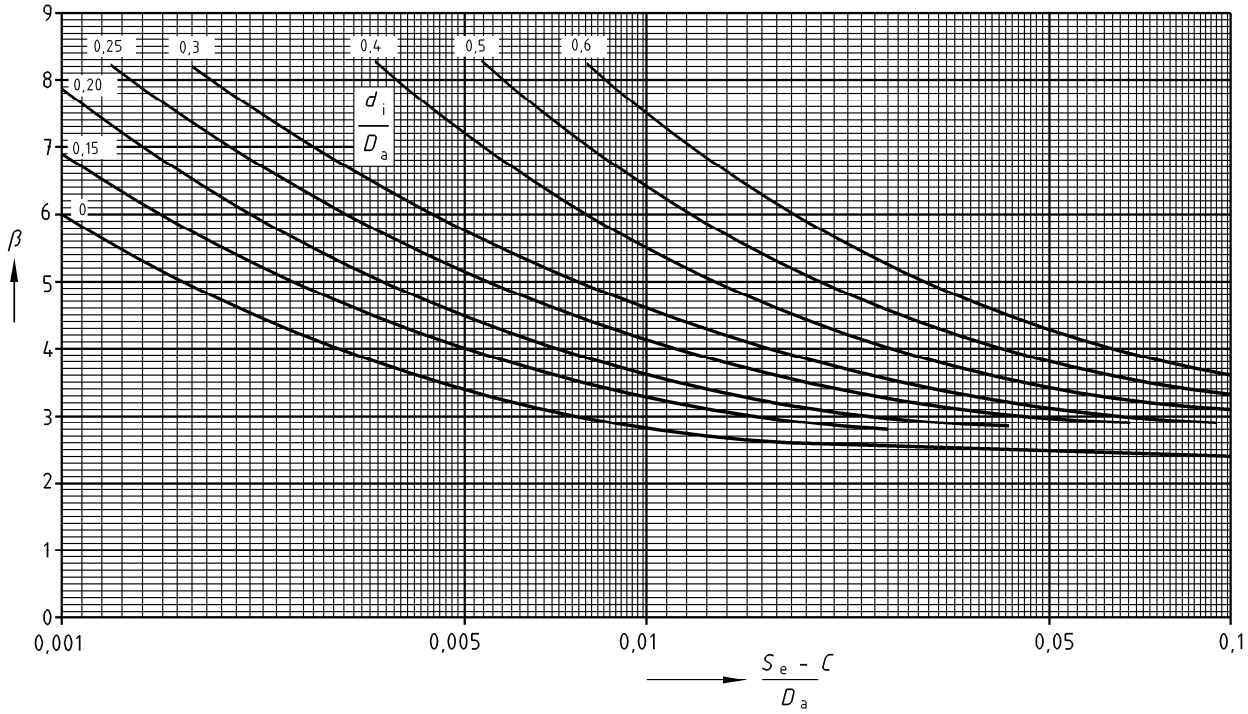




**Figure 5**

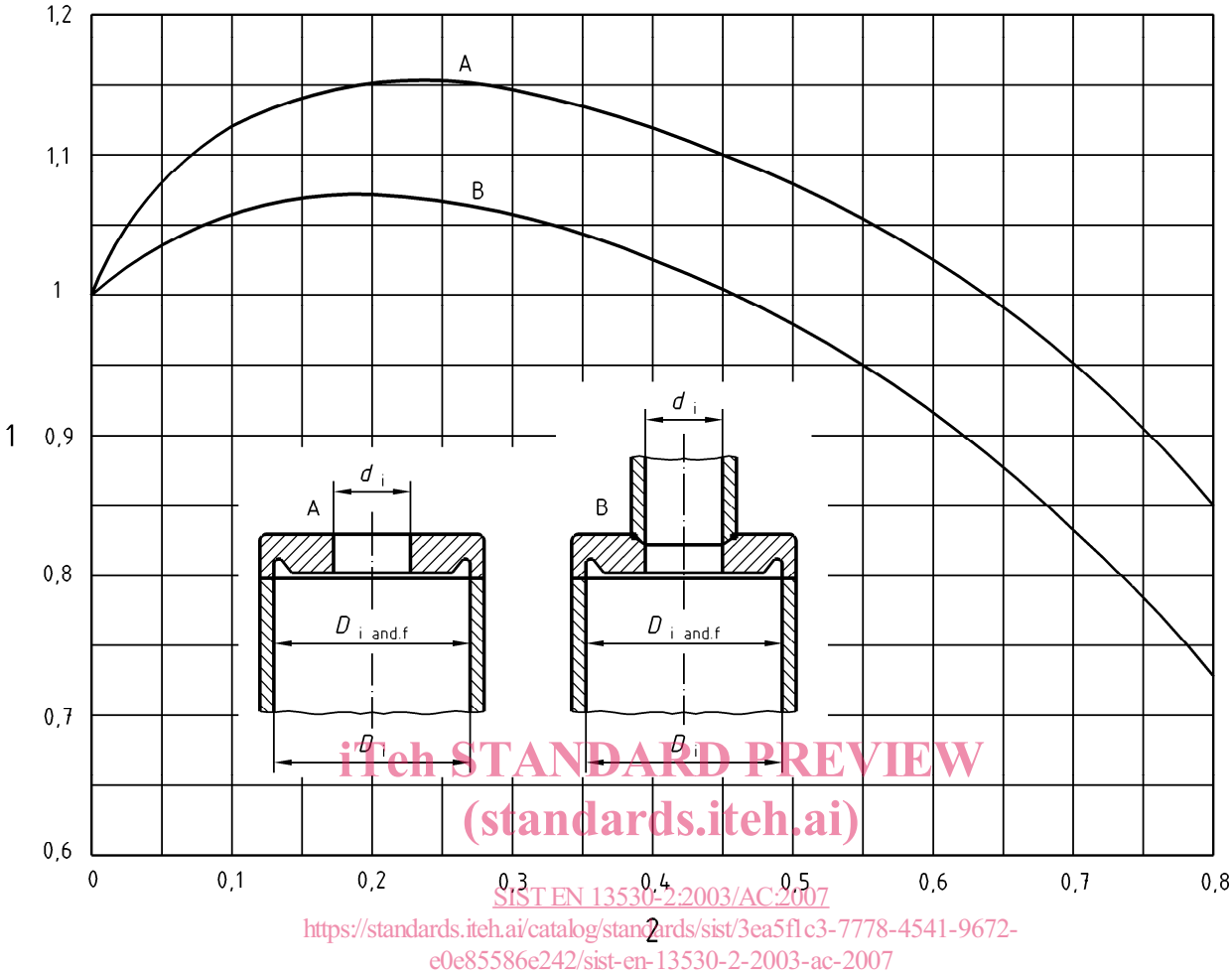




**Figure 11**

**Figure 12c)** : Modify to read "flat plate welded into the shell from one side only"

Design factor C : for $s \leq 3\ s_1$ = 0, 45 ; for $s \succ 3\ s_1$ = 0, 50

**Figure 12e)** : Modify to read "flat plate welded into the shell from both sides"

Design factor C : for $s \leq 3\ s_1$ = 0, 35 ; for $s \succ 3\ s_1$ = 0, 40

Replace Figure 13 and modify Key with the following:

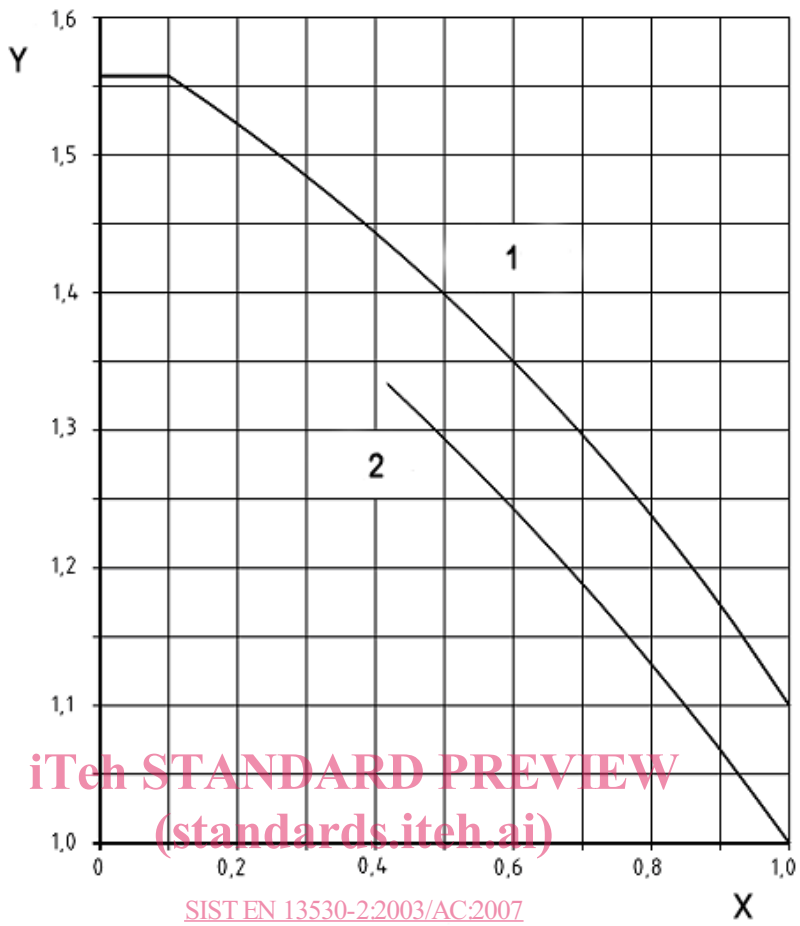




**Key**

1 Rectangle
2 Ellipse
Y Design factor $C_e$
X Ratio $f/e$

Rectangular plates

$f$ = short side of the rectangular plate

$e$ = long side of the rectangular plate

$$C_e = \begin{cases} \sum_{i=1}^{4} A_i \left(\frac{f}{e}\right)^{i-1} & \left| 0{,}1 < \left(\frac{f}{e}\right) \le 1{,}0 \right. \\ 1{,}562 & \left| 0 < \left(\frac{f}{e}\right) \le 0{,}1 \right. \end{cases}$$

$A_1$ = 1,589 146 00

$A_2$ = -0,239 349 90

$A_3$ = -0,335 179 80

$A_4$ = 0,085 211 76

Elliptical plates

$f$ = short side of the eliptical plate

$e$ = long side of the eliptical plate

$$C_e = \left\{ \sum_{i=1}^{4} A_i \left(\frac{f}{e}\right)^{i-1} \quad \left| 0{,}43 < \left(\frac{f}{e}\right) \le 1{,}0 \right. \right\}$$

$A_1$ = 1,489 146 00

$A_2$ = -0,239 349 90

$A_3$ = -0,335 179 80

$A_4$ = 0,085 211 76

**Figure 13 — Design factor $C_e$ for rectangular or elliptical flat plates**

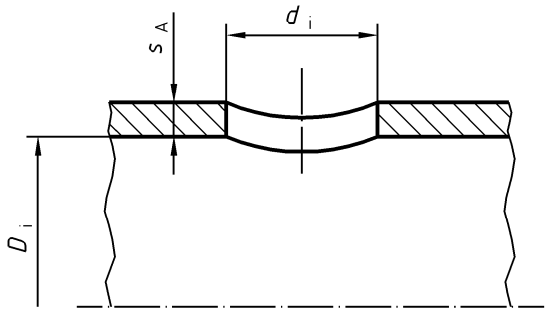


Figure 14

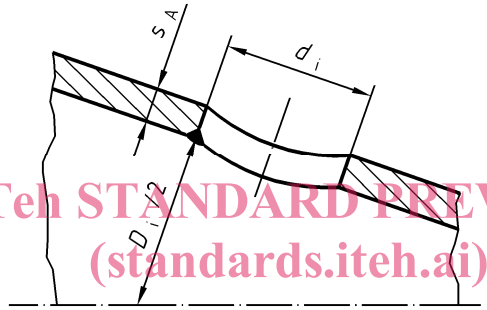




Figure 15

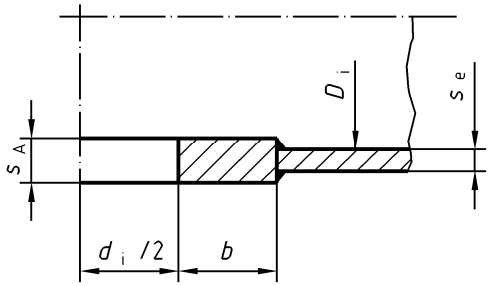


Figure 17

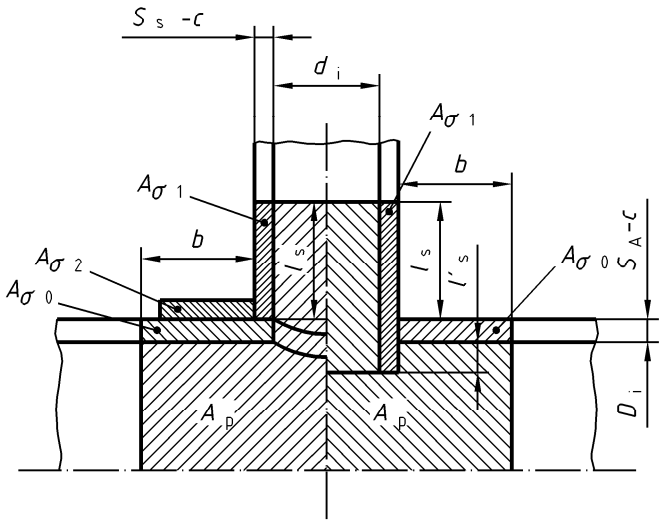


Figure 22



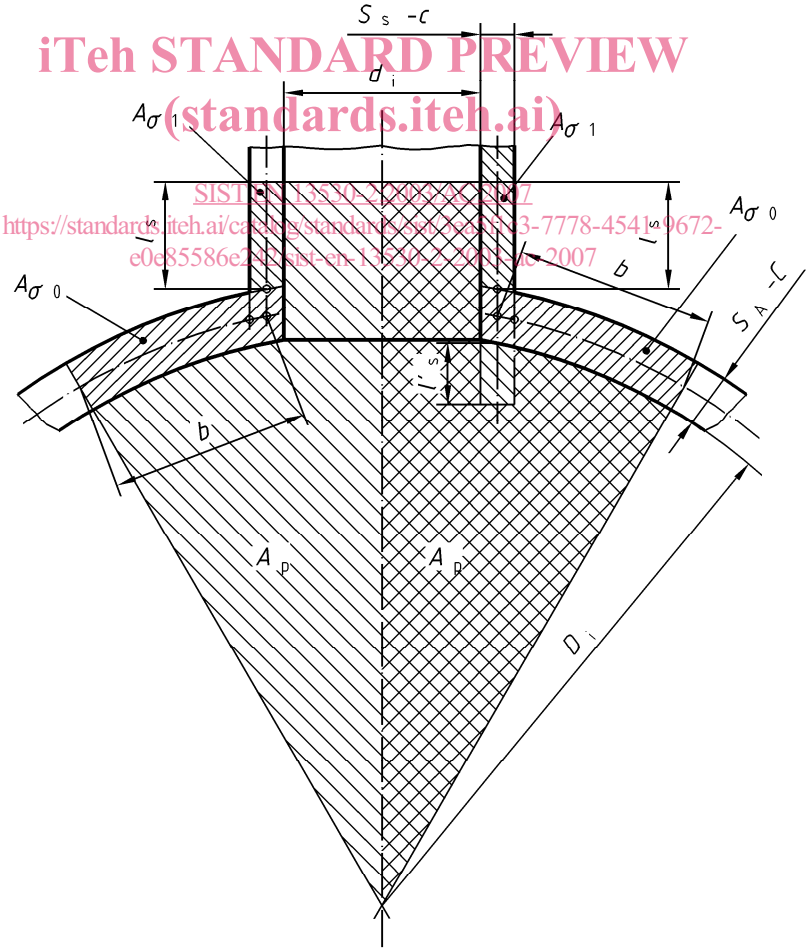


Figure 23

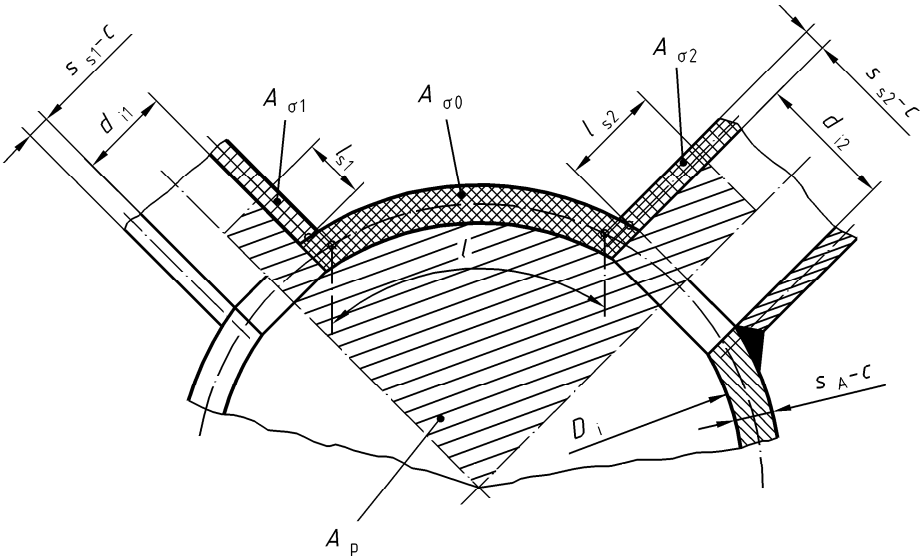




Figure 26



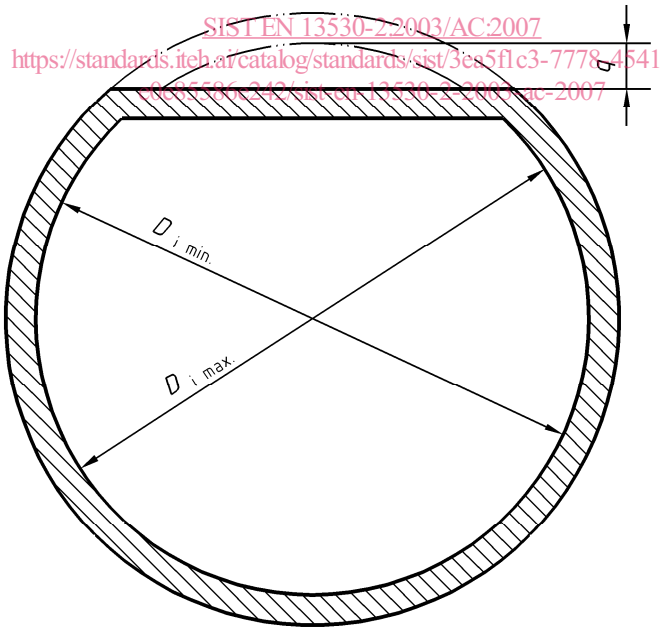


Figure 28