SLOVENSKI STANDARD

oSIST prEN 12374:2008

01-januar-2008

Embalaža - Prožne tube - Terminologija

Packaging - Flexible tubes - Terminology

Packmittel - Tuben - Terminologie

Emballage - Tubes souples - Terminologie

iTeh Standards
(https://standards.iteh.ai)
Document Preview

Ta slovenski standard je istoveten z: **prEN 12374**

ICS:

01.040.55	Pakiranje in distribucija blaga (Slovarji)	Packaging and distribution of goods (Vocabularies)
55.120	Ploļ evinke. Tube	Cans. Tins. Tubes

SIST EN 12374:2009
https://standards.iteh.ai/catalog/standards/sist/38c67d17-0128-4911-9342-a9f577beadd5/sist-en-12374-2009

oSIST prEN 12374:2008 **en,fr,de**

2003-01.Slovenski inštitut za standardizacijo. Razmnoževanje celote ali delov tega standarda ni dovoljeno.

iTeh Standards
(https://standards.iteh.ai)
Document Preview

SIST EN 12374:2009
https://standards.iteh.ai/catalog/standards/sist/38c67d17-9128-4211-9342-f9f177beadd5/sist-en-12374-2009

EUROPEAN STANDARD

NORME EUROPÉENNE

EUROPÄISCHE NORM

DRAFT
prEN 12374

October 2007

ICS 01.040.55; 55.120

Will supersede EN 12374:1998

English Version

Packaging - Flexible tubes - Terminology

Emballage - Tubes souples - Terminologie

Packmittel - Tuben - Terminologie

This draft European Standard is submitted to CEN members for enquiry. It has been drawn up by the Technical Committee CEN/TC 261.

If this draft becomes a European Standard, CEN members are bound to comply with the CEN/CENELEC Internal Regulations which stipulate the conditions for giving this European Standard the status of a national standard without any alteration.

This draft European Standard was established by CEN in three official versions (English, French, German). A version in any other language made by translation under the responsibility of a CEN member into its own language and notified to the CEN Management Centre has the same status as the official versions.

CEN members are the national standards bodies of Austria, Belgium, Bulgaria, Cyprus, Czech Republic, Denmark, Estonia, Finland, France, Germany, Greece, Hungary, Iceland, Ireland, Italy, Latvia, Lithuania, Luxembourg, Malta, Netherlands, Norway, Poland, Portugal, Romania, Slovakia, Slovenia, Spain, Sweden, Switzerland and United Kingdom.

Recipients of this draft are invited to submit, with their comments, notification of any relevant patent rights of which they are aware and to provide supporting documentation.

Warning : This document is not a European Standard. It is distributed for review and comments. It is subject to change without notice and shall not be referred to as a European Standard.

iTeh Standards
(https://standards.iteh.ai)
Document Preview
SIST EN 12374:2009
https://standards.iteh.ai/catalog/standards/sist/38c67d17-9128-4211-9342-f9f177beadd5/sist-en-12374-2009

EUROPEAN COMMITTEE FOR STANDARDIZATION
COMITÉ EUROPÉEN DE NORMALISATION
EUROPÄISCHES KOMITEE FÜR NORMUNG

Management Centre: rue de Stassart, 36 B-1050 Brussels

© 2007 CEN All rights of exploitation in any form and by any means reserved worldwide for CEN national Members.

Ref. No. prEN 12374:2007: E

Contents

Page

Foreword 3
1 Scope 4
2 General definitions 4
3 Specific terms for metallic tubes 4
4 Specific terms for plastics tubes 11
5 Specific terms for laminated tubes 17

iTeh Standards
(https://standards.iteh.ai)
Document Preview

SIST EN 12374:2009
https://standards.iteh.ai/catalog/standards/sist/38c67d17-9128-4211-9342-f9f177beadd5/sist-en-12374-2009

Foreword

This document (prEN 12374:2007) has been prepared by Technical Committee CEN/TC 261 “Packaging”, the secretariat of which is held by AFNOR.

This document is currently submitted to the CEN Enquiry.

This document will supersede EN 12374:1998.

It is based on the professional recommendation of the European Tube Manufacturers Association (ETMA).

It consists of a series of simplified drawings with number codes which identify the various parts and which in turn refer to their definition in the three official languages of the CEN.

It includes the following clauses:

- 2 General definitions
- 3 Specific terms for metallic tubes (Aluminium-tin)
- 4 Specific terms for plastics tubes
- 5 Specific terms for laminated tubes

iTeh Standards
(https://standards.iteh.ai)
Document Preview

SIST EN 12374:2009
https://standards.iteh.ai/catalog/standards/sist/38c67d17-9128-4211-9342-f9f177beadd5/sist-en-12374-2009

1 Scope

This standard defines the technical, vocabulary in German, English, French, widely in use for flexible tubes.

It is applicable to plastics or metal single layer flexible tubes, and to multilayer or laminated tubes which are used for packing pharmaceutical, cosmetic, hygiene, food, and other domestic or industrial products.

2 General definitions

For the purposes of this standard, the following definitions apply:

2.1
flexible tube
container of flexible metal, plastics or laminate which can be sealed in such a manner that its content, although readily discharged in any desired quantity is protected against external contamination during the whole period of use

2.2
shoulder
moulded or extruded component part of a total tube body which forms the nozzle end of the tube

2.3
nozzle
outlet of a flexible tube through which the content is expelled by squeezing the wall of the tube

2.4
tamper evident nozzle
nozzle which has the orifice closed by, for example, a thin diaphragm which can be pierced

2.5
cap
closure for the nozzle end of a flexible tube

iTeh Standards
(https://standards.iteh.ai)
Document Preview
SIST EN 12374:2009
https://standards.iteh.ai/catalog/standards/sist/38c67d17-9128-4211-9342-f9f177beadd5/sist-en-12374-2009

3 Specific terms for metallic tubes

The different parts of the tube are represented and identified in Figure 1.

Table 1 allows the corresponding term to be found in German, English and French.

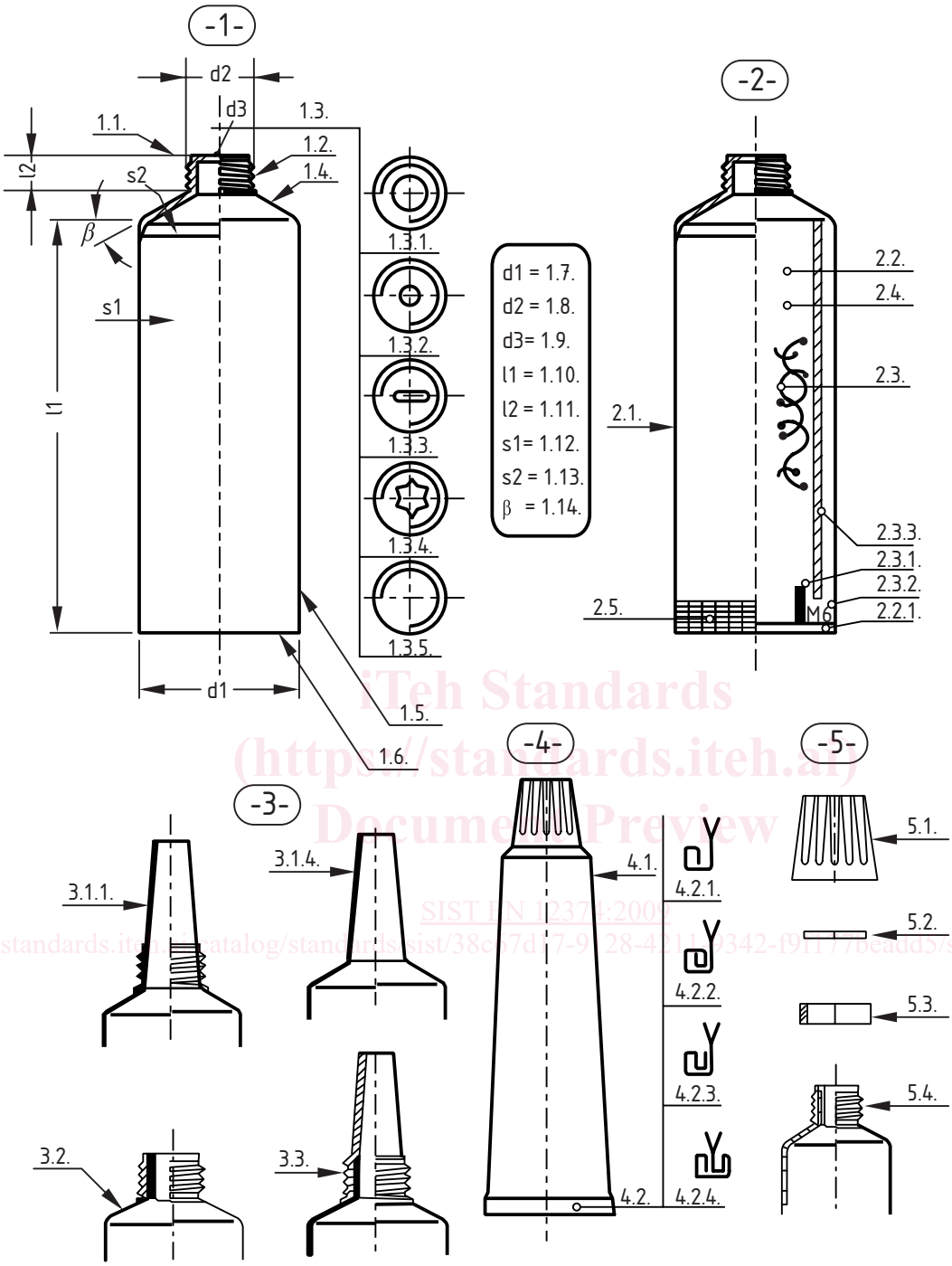

iTeh Standards
(https://standards.iteh.ai)
Document Preview
SIST EN 12374:2009
https://standards.iteh.ai/catalog/standards/sist/38c67d67-9128-4211-9342-f9f177beadd5/sist-en-12374-2009

Figure 1 — Metallic Tube

Table 1 — Specific terms for metallic tubes

METALLTUBEN	TUBES METALLIQUES	METALLIC TUBES
1 Blanke Tube	1 Tube brut	1 Plain undecorated tube
1.1 Tubenhals 1.1.1 Metall 1.1.2 Kunststoff 1.1.3 Grundlackiert	1.1 Tige 1.1.1 Métallique 1.1.2 Plastique 1.1.3 Laquée	1.1 Tube nozzle 1.1.1 Metal 1.1.2 Plastics 1.1.3 Enamelled
1.2 Tubengewinde 1.2.1 Metrisches Gewinde 1.2.2 Sondergewinde	1.2 Filetage 1.2.1 Métrique 1.2.2 Spécial	1.2 Tube thread 1.2.1 Metric thread 1.2.2 Other thread
1.3 Tubenhalsöffnung 1.3.1 Rund 1.3.2 Rund, klein (Sparöffnung) 1.3.3 Schlitzförmig 1.3.4 Sternförmig 1.3.5 verschlossen (Membran) 1.3.6 Garnierstern mit Membran 1.3.7 Abreißmembran	1.3 Orifice 1.3.1 Rond 1.3.2 Rond, petite ouverture 1.3.3 Rectangulaire 1.3.4 En étoile 1.3.5 Operculé 1.3.6 Etoile garniture avec membrane 1.3.7 Membrane à retirer	1.3 Tube nozzle orifice 1.3.1 Round 1.3.2 Round, small (economy opening) 1.3.3 Slit shaped 1.3.4 Star shaped 1.3.5 Closed (membrane) 1.3.6 Star shaped with membrane 1 .3.7 Membrane to remove
1.4 Tubenschulter 1.4.1 Glatt 1.4.2 Gerillt 1.4.3 Poliert 1.4.4 Gebürstet 1.4.5 Gedreht 1.4.6 Lackiert 1.4.7 Geprägt 1.4.8 Tastbare Gefahrenhinweise	1.4 Epaule (collet) 1.4.1 Lisse 1.4.2 Cerclée 1.4.3 Polie 1.4.4 Brossée 1.4.5 Lamée (à l'outil) 1.4.6 Laquée 1.4.7 Gravée 1.4.8 Repère tactile	1.4 Tube Shoulder 1.4.1 Smooth 1.4.2 Chased 1.4.3 Polished 1.4.4 Brush-finished 1.4.5 Twisted 1.4.6 Lacquered 1.4.7 Stamped 1.4.8 Tactile warnings of danger

iTeh Standards (https://standards.iteh.ai) Document Preview
https://standards.iteh.ai/catalog/standards/sist/7a7a7ad7-9f1f-4a7a-beadd5/sist-en-12374-2009

Table 1 — Specific terms for metallic tubes (continued)

METALLTUBEN	TUBES METALLIQUES	METALLIC TUBES
1.5 Tubenmantel 1.5.1 Zylindrisch 1.5.2 Konisch	1.5 Jupe (corps) 1.5.1 Cylindrique 1.5.2 Conique	1.5 Tube body 1.5.1 Cylindrical 1.5.2 Conical
1.6 Tubenende	1.6 Base de jupe (corps)	1.6 Tube open end
1.7 Tuben-Nenndurchmesser	1.7 Diamètre nominal du tube	1.7 Nominal diameter of tube
1.8 Gewinde-Nenndurchmesser	1.8 Diamètre nominal du filetage	1.8 Nominal diameter of thread
1.9 Durchmesser der Tubenhalsöffnung	1.9 Diamètre de l'orifice	1.9 Tube nozzle orifice diameter
1.10 Mantel-Nennlänge	1.10 Longueur nominale du tube	1.10 Nominal length of tube
1.11 Tubenhalslänge	1.11 Hauteur de la tige	1.11 Height of tube nozzle
1.12 Manteldicke	1.12 Epaisseur de la jupe	1.12 Thickness of body
1.13 Schulterdicke	1.13 Epaisseur du collet	1.13 Thickness of shoulder
1.14 Schulterwinkel	1.14 Angle du collet	1.14 Shoulder angle
2 Fertige Tube	2 Tube fini	2 Finished tube
2.1 Innenschutzlackierung	2.1 Vernis intérieur de protection	2.1 Internal protective varnish
2.2 Außenlackierung	2.2 Laque extérieure	2.2 External enamel
2.2.1 Unlackierter Rand am Tubenende	2.2.1 Base du tube non laquée	2.2.1 Open end of tube not enamelled
2.3 Bedruckung 2.3.1 Tastmarke (Codierung) 2.3.2 Herstellerkennzeichen 2.3.3 Drucküberlappung	2.3 Impression 2.3.1 Repère de fermeture 2.3.2 Référence du fabricant 2.3.3 Raccord d'impression	2.3 Printing 2.3.1 Registration mark 2.3.2 Manufacturer's design 2.3.3 Print overlap

iTeh Standards
(https://standards.iteh.ai)
Document Preview
SIST EN 12374:2009
https://standards.iteh.ai/catalog/standards/sist/7f7f7f9-9f4f-4f3f-b342-f7f7f7f7f7f7/sist-en-12374-2009/sist-en-12374-2009/sist-en-12374-2009

Table 1 — Specific terms for metallic tubes (continued)

METALLTUBEN	TUBES METALLIQUES	METALLIC TUBES
2.4 Überlackierung	2.4 Vernis extérieur de protection	2.4 External varnish
2.5 Dichtungsring im Tubenende 2.5.1 Dichtgummi 2.5.2 Heißsiegellack	2.5 Joint d'étanchéité 2.5.1 Joint d'étanchéité 2.5.2 Joint thermoscelable	2.5 End sealant 2.5.1 End sealant 2.5.2 Heat sealing lacquer
3 Tube mit Spezialhals	3 Tube à tige spéciale	3 Tube with special nozzle
3.1 Tube mit Metall-Injektionsspitze 3.1.1 Konisch 3.1.2 Mit runder Öffnung 3.1.3 Mit Membran (geschlossen) 3.1.4 Ohne Gewinde	3.1 Tube à canule métallique 3.1.1 Conique 3.1.2 A orifice rond 3.1.3 Operculé 3.1.4 Sans filetage	3.1 Tube with metal cannula nozzle 3.1.1 Conical 3.1.2 With round orifice 3.1.3 With membrane (closed) 3.1.4 Without thread
3.2 Tube mit aufgesetztem Tubenhals 3.2.1 Gewindering 3.2.2 Gewindenippel	3.2 Tube à tige plastique rapportée 3.2.1 Embout fileté 3.2.2 Embout canule fileté	3.2 Tube with applied plastics nozzle 3.2.1 Threaded 3.2.2 Threaded cannula
3.3 Tube mit aufgesetzter Kunststoffkanüle 3.3.1 Aufgepreßt 3.3.2 Aufgeschraubt	3.3 Tube à canule plastique 3.3.1 Encliquetée 3.3.2 Vissée	3.3 Tube with plastics cannula 3.3.1 Pressed on 3.3.2 Screwed on
4 Tube gefüllt und durch Falzung verschlossen	4 Tube rempli et fermé par pliage	4 Tube filled and then closed by crimping
4.1 Tubenflanke	4.1 Bord du tube	4.1 Edge of tube

iTeh Standards
(https://standards.iteh.ai)
Document Preview
SIST EN 12374:2009
https://standards.iteh.ai/catalog/standards/sist/1a9d1f42-4a1-f42-f9f177beadd5/sist-en-12374-2009